KIPU

Anderssen & Voll | 2014



KIPU

Anderssen & Voll | 2014

In summer, it was a pleasure to collect the pebbles on the beach, hold them in your hand and feel their edges smoothed by the waves. Some of them would even end up in your pocket as a reminder of an encounter, a unique day. Anderssen & Voll have retraced these happy moments and transformed the most beautiful pebbles into a wonderful collection of poufs. All in different heights, colours and shapes. All in versatile combinations that transform a top into a seat. And it is as if every office, lounge and home environment suddenly overlooked a beach on the North Sea.



KIPU

Anderssen & Voll | 2014

| D06 mini pouf 48x48 h45

Pouf with fire-retardant moulded polyurethane foam double density and polyester fiber on a plywood base, covered with removable fabric, soft leather or eco-leather. Glides in polypropylene.

TEST 1 IM - Hallingdal 65, GRIMM FR

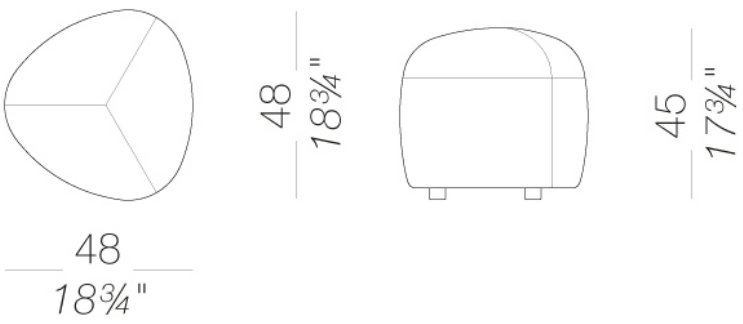

KIPU

Anderssen & Voll | 2014

| D01 small pouf 57x57 H45

Pouf with fire-retardant moulded polyurethane foam double density and polyester fiber on a plywood base, covered with removable fabric, soft leather or eco-leather. Glides in polypropylene.

TEST 1 IM - Hallingdal 65, GRIMM FR

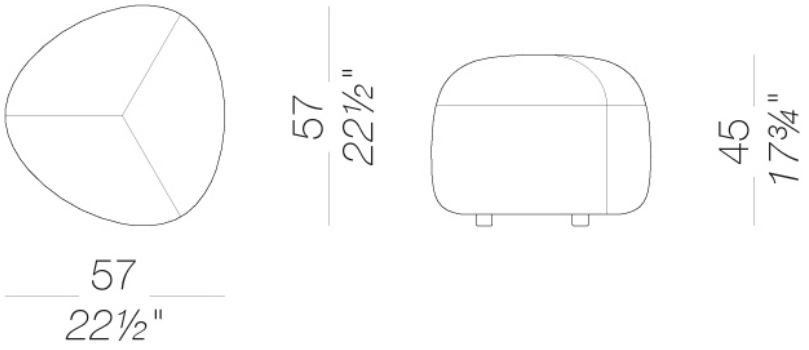

KIPU

Anderssen & Voll | 2014

| D02 Medium pouf 80x80 H40

Pouf with fire-retardant moulded polyurethane foam double density and polyester fi ber on a plywood base, covered with removable fabric, soft leather or eco-leather. Glides in polypropylene.

TEST 1 IM - Hallingdal 65, GRIMM FR

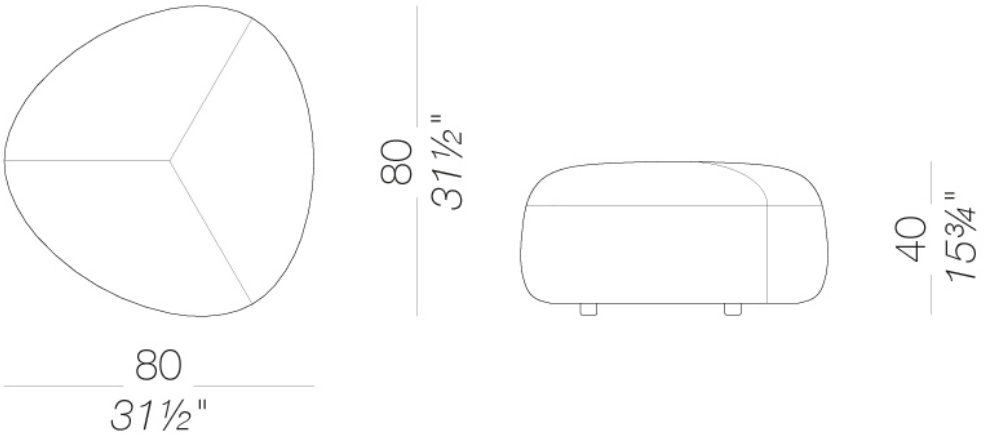

KIPU

Anderssen & Voll | 2014

| D04 medium pouf 80x80 H45

Pouf with fi re-retardant moulded polyurethane foam double density and polyester fiber on a plywood base, covered with removable fabric, soft leather or eco-leather. Glides in polypropylene

TEST 1 IM - Hallingdal 65, GRIMM FR

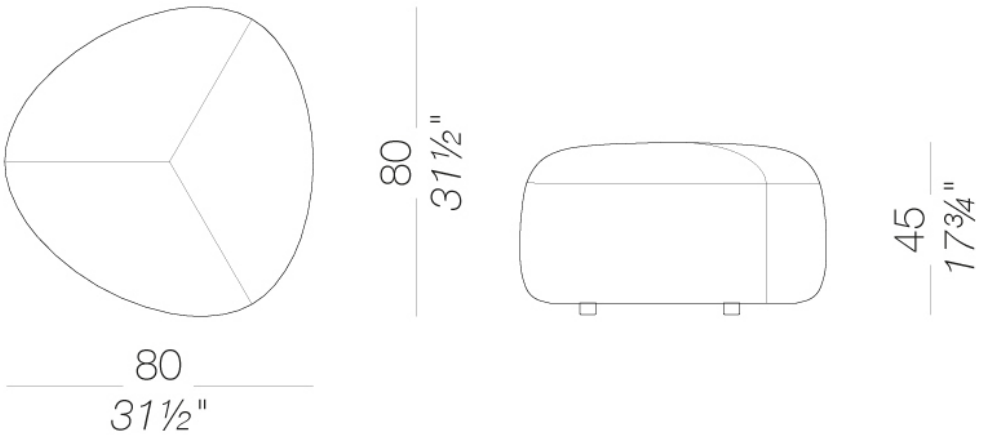

KIPU

Anderssen & Voll | 2014

| D03 large pouf 130x130 H36

Pouf with fi re-retardant moulded polyurethane foam double density and polyester fiber on a plywood base, covered with removable fabric, soft leather or eco-leather. Glides in polypropylene.

TEST 1 IM - Hallingdal 65, GRIMM FR

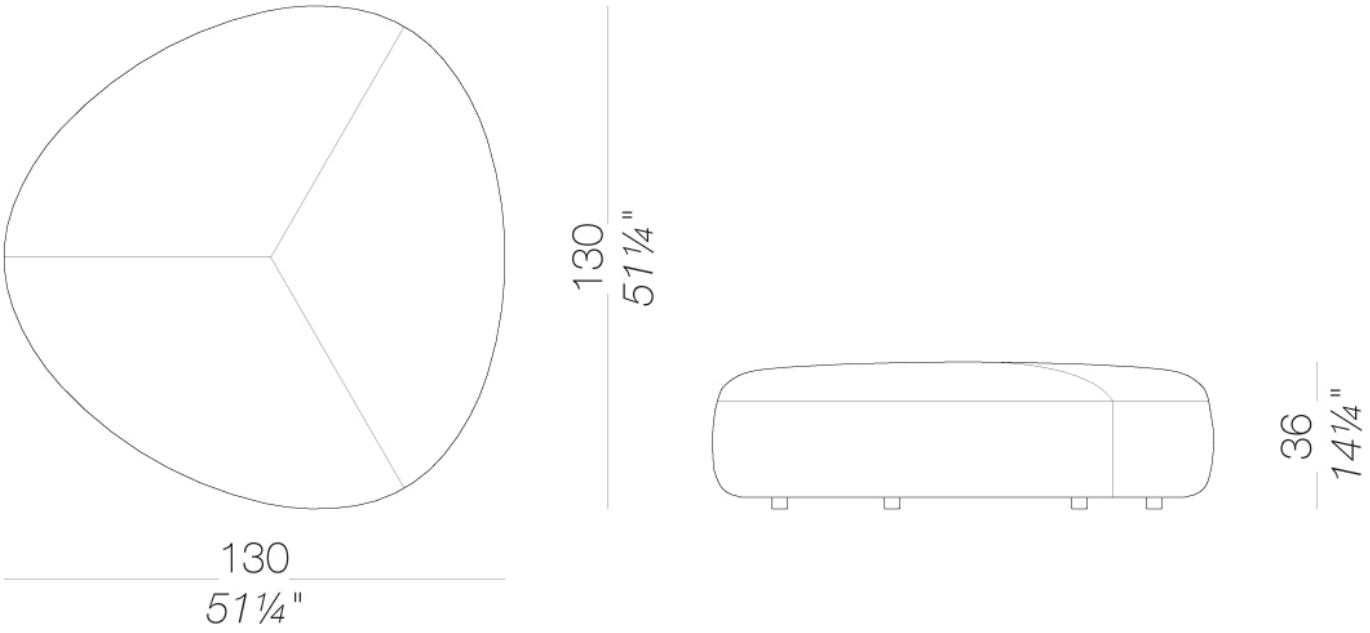

KIPU

Anderssen & Voll | 2014

| D05 Large pouf 130x130 H45

Pouf with fi re-retardant moulded polyurethane foam double density and polyester fiber on a plywood base, covered with removable fabric, soft leather or eco-leather. Glides in polypropylene.

TEST 1 IM - Hallingdal 65, GRIMM FR

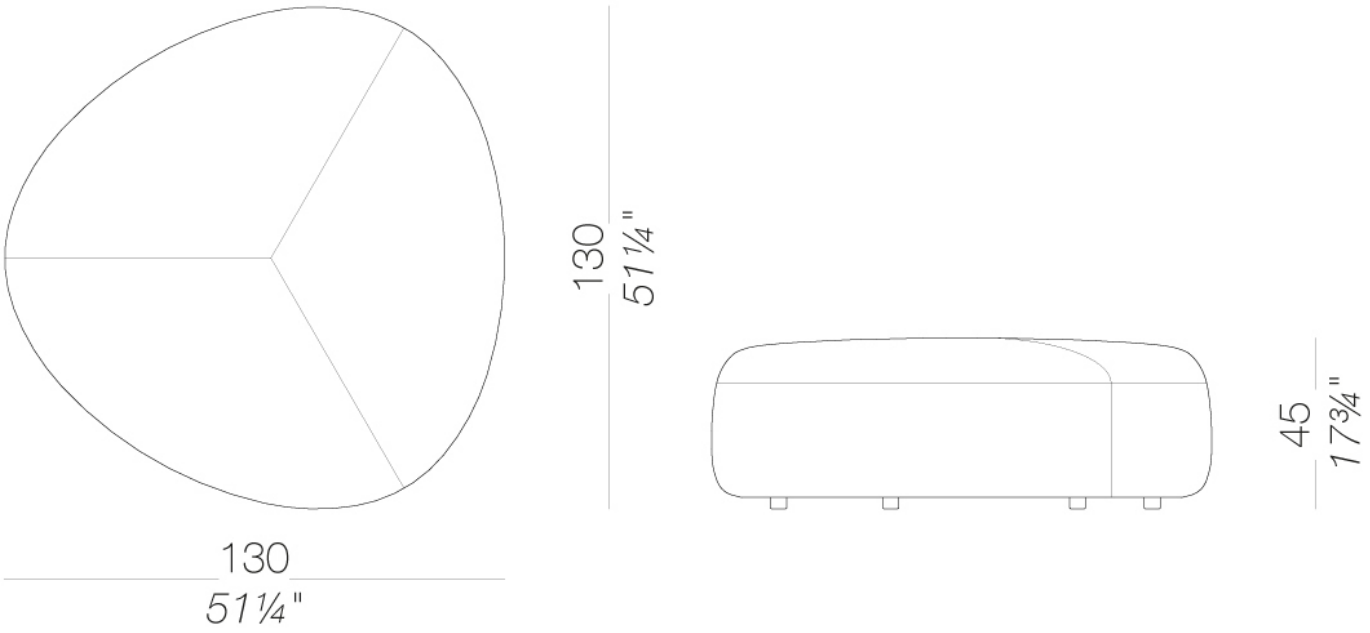

KIPU

Anderssen & Voll | 2014

upholstery

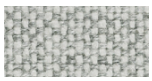
fabric
Hallingdal 65 - Grade C
58 Colors


fabric
Canvas 2 - Grade C
45 Colors


fabric
Steelcut Trio 3 - Grade D
54 Colors


fabric
Remix 3 - Grade C
72 Colors


fabric
Clara 2 - Grade C
24 Colors

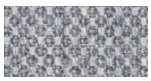
fabric
Fiord 2 - Grade C
39 Colors


fabric
Divina MD - Grade D
27 Colors


fabric
Divina Melange 3 - Grade D
38 Colors


fabric
Tonica 2 - Grade C
39 Colors


fabric
Medley - Grade A
37 Colors

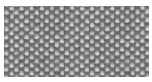
fabric
Maya - Grade A
43 Colors


fabric
Jet - Grade A
66 Colors


fabric
Lapalma Smart - Grade C
18 Colors

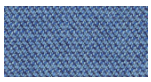
fabric
Capture - Grade B
43 Colors


fabric
Crisp - Grade B
40 Colors


fabric
Nattè - Grade B
30 Colors

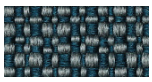
fabric
Iris - Grade B
24 Colors


fabric
Steelcut 3 - Grade D
40 Colors

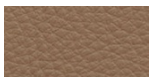
soft-leather
Soft-leather
17 Colors


ecoleather
GRIMM FR - Grade A
32 Colors


ecoleather
Valencia - Grade B
66 Colors

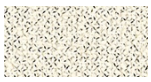
fabric
Grain - Grade. B
50 Colors


fabric
Re-wool - Grade C
21 Colors

consult the porfolio for the range of colors, fabrics, eco-leather, soft-leather.

use and maintenance instructions

Clean all parts in wood, leather, fabric and metal with a damp cloth or a diluted neutral cleaner. Do not use cleaners with alcohol, bleach, solvent or abrasive products. Any liquid spilt on the product must be wiped up immediately.When lifting or moving the product, hold it on the structure and not under the seat. The product should not be subjected to unbalanced weights, as it is designed for a proper rest on the foothold (on four legs or on the base). Our company relieves from any responsibility in case of damage caused to fragile floors. Avoid any improper use of the product: do not step on the product, on the footrest or on the armrests. Avoid any movements that could compromise the proper functionality of the product or the safety of the users.Wood and leather, being natural materials, could be easily damaged. Small impurities or imperfections are within quality standard range.Do not expose the product to weather conditions or atmospheric agents, nor to heat sources over 40°C. Also products for outdoor use could be afflicted by atmospheric agents. The product could undergo possible exterior changes due to particular exposure to heat, humidity and saltiness. An appropriate and frequent maintenance and cleaning of the product enhances its durability. The product could change colour and shade, if exposed to direct sunlight. Maintenance has to be carried out by experienced staff. Dispose of the package only after assembling the product, in order to avoid the loss of ironmongery and components. Once the product has been dismantled, the product itself or its components must be given to the public garbage disposal system, according to the legislation in force.