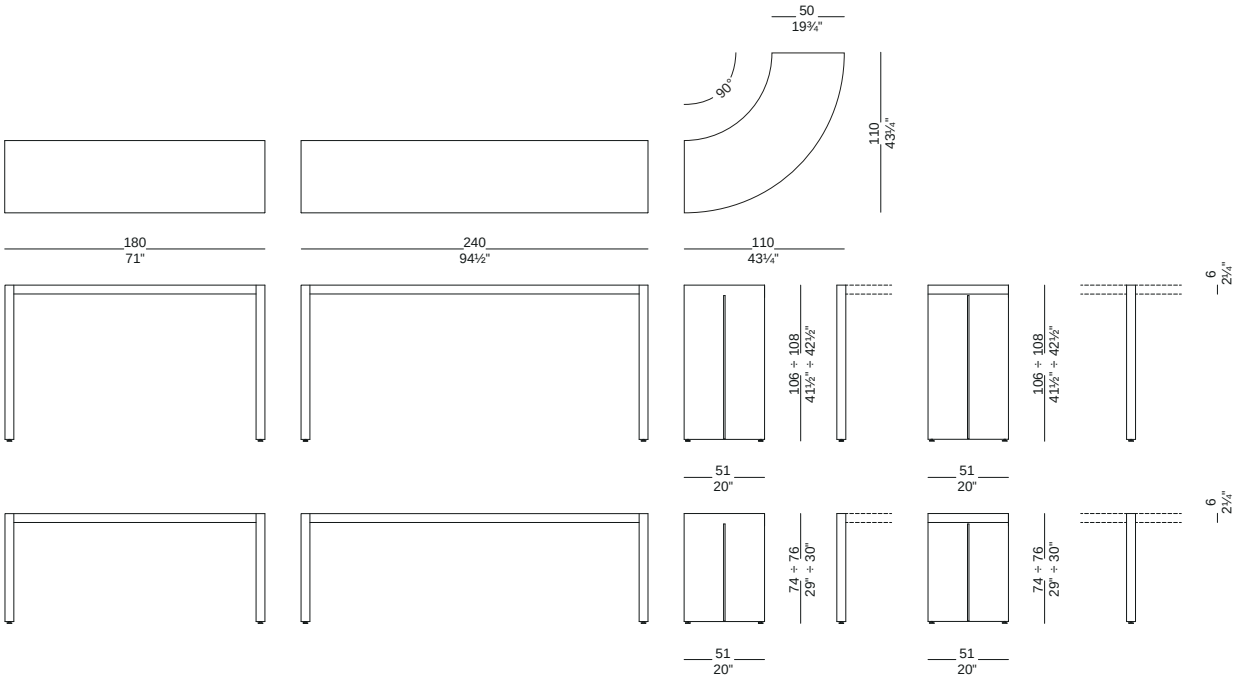
50
19¾"
90°
110
43¼"
180
71"
240
94½"
110
43¼"
106 ÷ 108
41½" ÷ 42½"
106 ÷ 108
41½" ÷ 42½"
6
2¼"
51
20"
51
20"
74 ÷ 76
29" ÷ 30"
74 ÷ 76
29" ÷ 30"
6
2¼"
51
20"
51
20"