# PLUS

CMP-PLUS-I-L-SHAPE | Francesco Rota | 2017



lapalma.it

lapalma

# PLUS

CMP-PLUS-I-L-SHAPE | Francesco Rota | 2017



L-shape

L shape. Composition modulaire entièrement déhoussable en mousse polyuréthane ignifuge à densité différenciée et fibre polyester couplée, revêtue de tissu, cuir ou similicuir. Les modules sont reliés par des ferrures intégrées à la structure en bois. Compatible avec les coussins OORT et, selon la configuration, avec le système SCREEN.



## L-shape

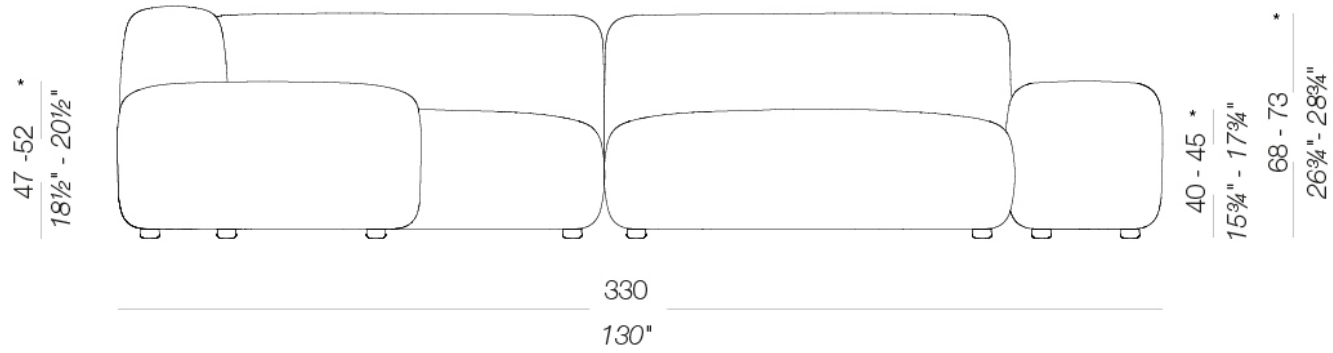


*height available h 47 or h 52 / height available h 18½" - 20½"
*height available h 40 or h 45 / height available h 15¾ or h 17¾"
*height available h 68 or h 73 / height available h 26¾"- 28¾"

## RIVESTIMENTO



**Atrium** (E)
16 colori



**Blazer** (D)
77 colori



**Canvas** (B)
45 colori



**Capture** (C)
59 colori



**Chili** (A)
47 colori



**Crisp** (C)
40 colori



**Divina MD** (F)
27 colori



**Divina Melange 3** (F)
38 colori



**Fiocco** (B)
34 colori



**Fiord 2** (C)
39 colori



**Grain** (B)
50 colori



**Hallingdal 65** (C)
58 colori



**Iris** (D)
34 colori



**Jet** (A)
66 colori



**Main Line Flax** (C)
57 colori



**Maya** (A)
43 colori



**Medley** (A)
37 colori



**Naveli** (E)
24 colori



**Nobel** (D)
30 colori



**Panama** (A)
48 colori



**Re-wool** (E)
26 colori



**Remix 3** (C)
74 colori



**Sorrento** (B)
22 colori



**Steelcut 3** (D)
56 colori



**Steelcut trio 3** (F)
54 colori



**Tonica 2** (F)
39 colori



**Umber** (C)
36 colori



**Valencia** (B)
72 colori



**Seta**
17 colori

## BRACCIOLI



**Atrium** (E)
16 colori



**Blazer** (D)
77 colori



**Canvas** (B)
45 colori



**Capture** (C)
59 colori



**Chili** (A)
47 colori



**Crisp** (C)
40 colori



**Divina MD** (F)
27 colori



**Divina Melange 3** (F)
38 colori



**Fiocco** (B)
34 colori



**Fiord 2** (C)
39 colori



**Grain** (B)
50 colori



**Hallingdal 65** (C)
58 colori



**Iris** (D)
34 colori



**Jet** (A)
66 colori



**Main Line Flax** (C)
57 colori



**Maya** (A)
43 colori



**Medley** (A)
37 colori



**Naveli** (E)
24 colori



**Nobel** (D)
30 colori



**Panama** (A)
48 colori



**Re-wool** (E)
26 colori



**Remix 3** (C)
74 colori



**Sorrento** (B)
22 colori



**Steelcut 3** (D)
56 colori



**Steelcut trio 3** (F)
54 colori



**Tonica 2** (F)
39 colori

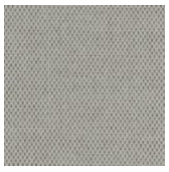

**Umber** (C)
36 colori



**Valencia** (B)
72 colori



**Laccato poro aperto**
Legno



**Beige luxor**
HPL



**Bianco**
HPL



**Blu fes**
HPL

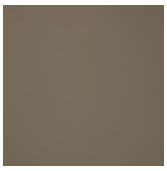

**Castoro ottawa**
HPL



**Grigio efeso**
HPL



**Grigio Londra**
HPL



**Nero**
HPL



**Rosso Jaipur**
HPL



**Verde comodoro**
HPL

## STAFFE DI UNIONE



**Alluminio**

Metallo

**Istruzioni di uso e manutenzione**

Clean all parts in wood, leather, fabric and metal with a damp cloth or a diluted neutral cleaner. Do not use cleaners with alcohol, bleach, solvent or abrasive products. Any liquid spilt on the product must be wiped up immediately.

When lifting or moving the product, hold it on the structure and not under the seat. The product should not be subjected to unbalanced weights, as it is designed for a proper rest on the foothold (on four legs or on the base).

Avoid any improper use of the product: do not step on the product, on the footrest or on the armrests. Do not expose the product to weather conditions or atmospheric agents, nor to heat sources over 40°C. Also products for outdoor use could be afflicted by atmospheric agents.

An appropriate and frequent maintenance and cleaning of the product enhances its durability. The product could change colour and shade, if exposed to direct sunlight. Once the product has been dismantled, the product itself or its components must be given to the public garbage disposal system, according to the legislation in force.

lapalma