LEM

S80 | Shin & Tomoko Azumi | 2000



lapalma.it

lapalma

LEM

S80 | Shin & Tomoko Azumi | 2000



Sgabello H 66÷79

Tabouret pivotant réglable en hauteur avec assise en multiplis courbé en plusieurs finitions. Structure en acier chromé ou laqué epoxy avec piston chromé mat. Base revêtue en acier inox Aisi 304 finition “toile de lin” ou complètement laqué epoxy. Patins en feutre sous la base.



Sgabello H 66÷79

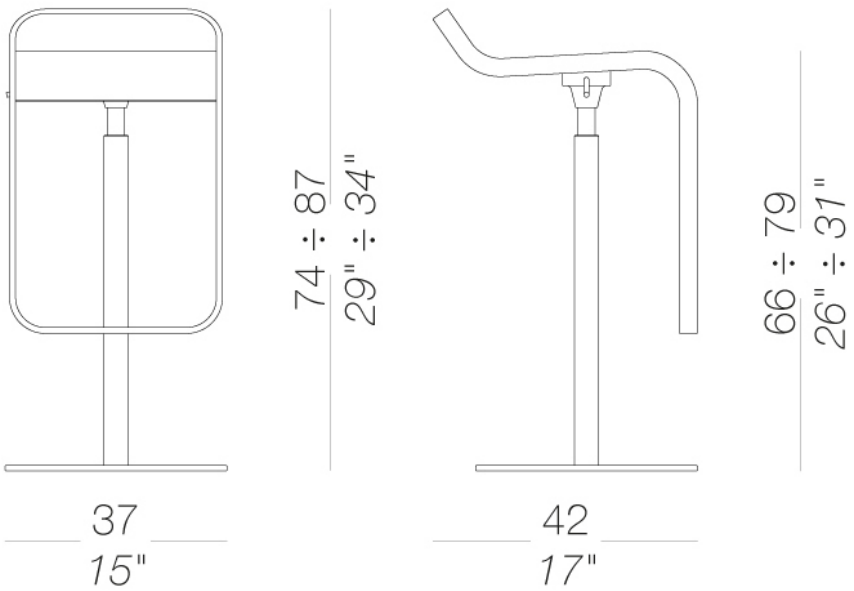

STRUTTURA



Alluminio
Metallo



Alloro
Metallo

Bianco
Metallo



Borgogna
Metallo

Calce
Metallo



Cannella
Metallo



Celeste
Metallo



Corallo
Metallo



Gru
Metallo

Limone
Metallo



Mattone
Metallo



Nero
Metallo



Oltremare
Metallo

Perla
Metallo



Pistacchio
Metallo



Sabbia
Metallo



Tortora
Metallo

SEDILE



Frassino
Legno



Alloro
Legno



Borgogna
Legno

Calce
Legno



Cannella
Legno



Celeste
Legno



Corallo
Legno



Gru
Legno

SEDILE

Limone
Legno



Mattone
Legno



Nero
Legno



Oltremare
Legno

Perla
Legno



Pistacchio
Legno



Tortora
Legno

Bianco
Legno



Sabbia
Legno



Rosso Jaipur
Laminato



Verde comodoro
Laminato



Alluminio
Metallo



Maya (A)
43 colori

Cuoio
1 colore

Istruzioni di uso e manutenzione

Clean all parts in wood, leather, fabric and metal with a damp cloth or a diluted neutral cleaner. Do not use cleaners with alcohol, bleach, solvent or abrasive products. Any liquid spilt on the product must be wiped up immediately.

When lifting or moving the product, hold it on the structure and not under the seat. The product should not be subjected to unbalanced weights, as it is designed for a proper rest on the foothold (on four legs or on the base).

Avoid any improper use of the product: do not step on the product, on the footrest or on the armrests. Do not expose the product to weather conditions or atmospheric agents, nor to heat sources over 40°C. Also products for outdoor use could be afflicted by atmospheric agents.

An appropriate and frequent maintenance and cleaning of the product enhances its durability. The product could change colour and shade, if exposed to direct sunlight. Once the product has been dismantled, the product itself or its components must be given to the public garbage disposal system, according to the legislation in force.

lapalma