MIUNN

S104 | Karri Monni | 2011



lapalma.it

lapalma

MIUNN

S104 | Karri Monni | 2011



Base girevole

Tabouret pivotant réglable en hauteur. Coque en polypropylène, en multiplis

courbé avec technologie 3D en plusieurs finitions, en polyuréthane rigide Baydur® ignifuge laqué

blanc ou noir ou entièrement revêtu en tissu, cuir ou tissu enduit. Colonne en acier inox Aisi 304 microbillé et base

carrée revêtue en acier finition “toile de lin”ou complètement laqué epoxy. Patins en feutre sous la base.



Base girevole

Note importante : la version en polypropylène (PP) présente une hauteur augmentée de 2 cm par rapport aux autres variantes.

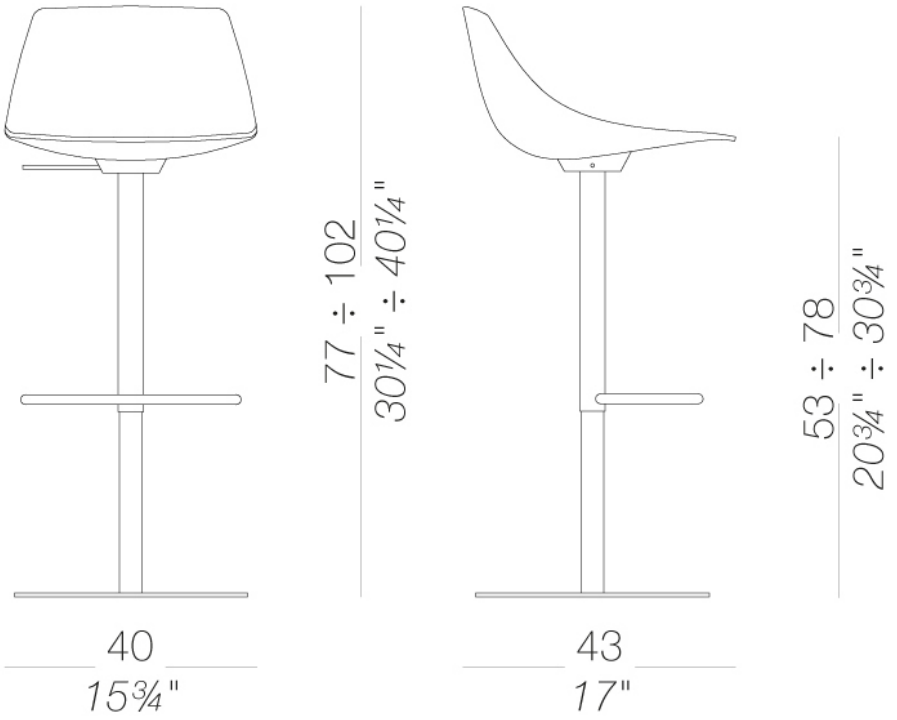

STRUTTURA



Acciaio inox
Metallo

SCOCCA

Bianco
Plastica



Nero
Plastica



Alloro
Plastica



Borgogna
Plastica

Calce
Plastica



Cannella
Plastica



Celeste
Plastica



Corallo
Plastica



Gru
Plastica

Limone
Plastica



Mattone
Plastica



Oltremare
Plastica

Perla
Plastica



Pistacchio
Plastica



Sabbia
Plastica



Tortora
Plastica



Noce Canaletto
Legno



Rovere noce scuro
Legno



Rovere sbiancato
Legno



Laccato poro aperto
Legno

RIVESTIMENTO



Atrium (E)
16 colori



Blazer (D)
77 colori



Canvas (B)
45 colori



Capture (C)
59 colori



Chili (A)
47 colori



Crisp (C)
40 colori



Divina MD (F)
27 colori



Divina Melange 3 (F)
38 colori

Fiocco (B)
34 colori



Fiord 2 (C)
39 colori



Grain (B)
50 colori

Hallingdal 65 (C)
58 colori

Iris (D)
34 colori

Jet (A)
66 colori



Main Line Flax (C)
57 colori



Maya (A)
43 colori



Medley (A)
37 colori



Naveli (E)
24 colori



Nobel (D)
30 colori



Panama (A)
48 colori



Re-wool (E)
26 colori



Remix 3 (C)
74 colori



Sorrento (B)
22 colori

Steelcut 3 (D)
56 colori



Steelcut trio 3 (F)
54 colori



Tonica 2 (F)
39 colori



Umber (C)
36 colori



Valencia (B)
72 colori

Seta
17 colori



Cuoio
15 colori



Cuoio cerniere
2 colori

Istruzioni di uso e manutenzione

Clean all parts in wood, leather, fabric and metal with a damp cloth or a diluted neutral cleaner. Do not use cleaners with alcohol, bleach, solvent or abrasive products. Any liquid spilt on the product must be wiped up immediately.

When lifting or moving the product, hold it on the structure and not under the seat. The product should not be subjected to unbalanced weights, as it is designed for a proper rest on the foothold (on four legs or on the base).

Avoid any improper use of the product: do not step on the product, on the footrest or on the armrests. Do not expose the product to weather conditions or atmospheric agents, nor to heat sources over 40°C. Also products for outdoor use could be afflicted by atmospheric agents.

An appropriate and frequent maintenance and cleaning of the product enhances its durability. The product could change colour and shade, if exposed to direct sunlight. Once the product has been dismantled, the product itself or its components must be given to the public garbage disposal system, according to the legislation in force.

lapalma