OORT

D243 | Francesco Rota | 2017



lapalma.it

lapalma

OORT

D243 | Francesco Rota | 2017



Cuscino

Coussins revêtus en tissu amovible en plusieurs dimensions, rembourrés à secteurs en microfibres de polyester hypoallergénique et hydrofuge.



Cuscino

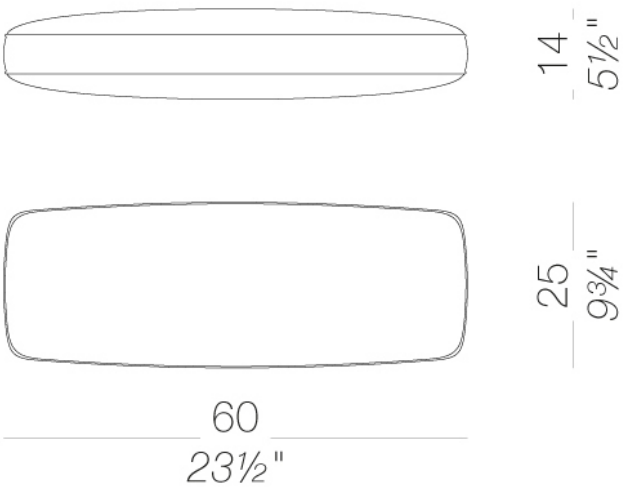

RIVESTIMENTO



Atrium (E)
16 colori



Blazer (D)
77 colori



Canvas (B)
45 colori



Capture (C)
59 colori



Chili (A)
47 colori



Crisp (C)
40 colori



Divina MD (F)
27 colori



Divina Melange 3 (F)
38 colori

Fiocco (B)
34 colori



Fiord 2 (C)
39 colori



Grain (B)
50 colori

Hallingdal 65 (C)
58 colori

Iris (D)
34 colori

Jet (A)
66 colori



Main Line Flax (C)
57 colori



Maya (A)
43 colori



Medley (A)
37 colori



Naveli (E)
24 colori



Nobel (D)
30 colori



Panama (A)
48 colori



Re-wool (E)
26 colori



Remix 3 (C)
74 colori



Sorrento (B)
22 colori

Steelcut 3 (D)
56 colori



Steelcut trio 3 (F)
54 colori



Tonica 2 (F)
39 colori



Umber (C)
36 colori



Valencia (B)
72 colori

Istruzioni di uso e manutenzione

Clean all parts in wood, leather, fabric and metal with a damp cloth or a diluted neutral cleaner. Do not use cleaners with alcohol, bleach, solvent or abrasive products. Any liquid spilt on the product must be wiped up immediately.

When lifting or moving the product, hold it on the structure and not under the seat. The product should not be subjected to unbalanced weights, as it is designed for a proper rest on the foothold (on four legs or on the base).

Avoid any improper use of the product: do not step on the product, on the footrest or on the armrests. Do not expose the product to weather conditions or atmospheric agents, nor to heat sources over 40°C. Also products for outdoor use could be afflicted by atmospheric agents.

An appropriate and frequent maintenance and cleaning of the product enhances its durability. The product could change colour and shade, if exposed to direct sunlight. Once the product has been dismantled, the product itself or its components must be given to the public garbage disposal system, according to the legislation in force.

lapalma