WOD

CMP-WOD-I-PANNELLO-DIVISORIO-RIVESTITO-IN-TESSUTO-H140CM | Raffaella Ma

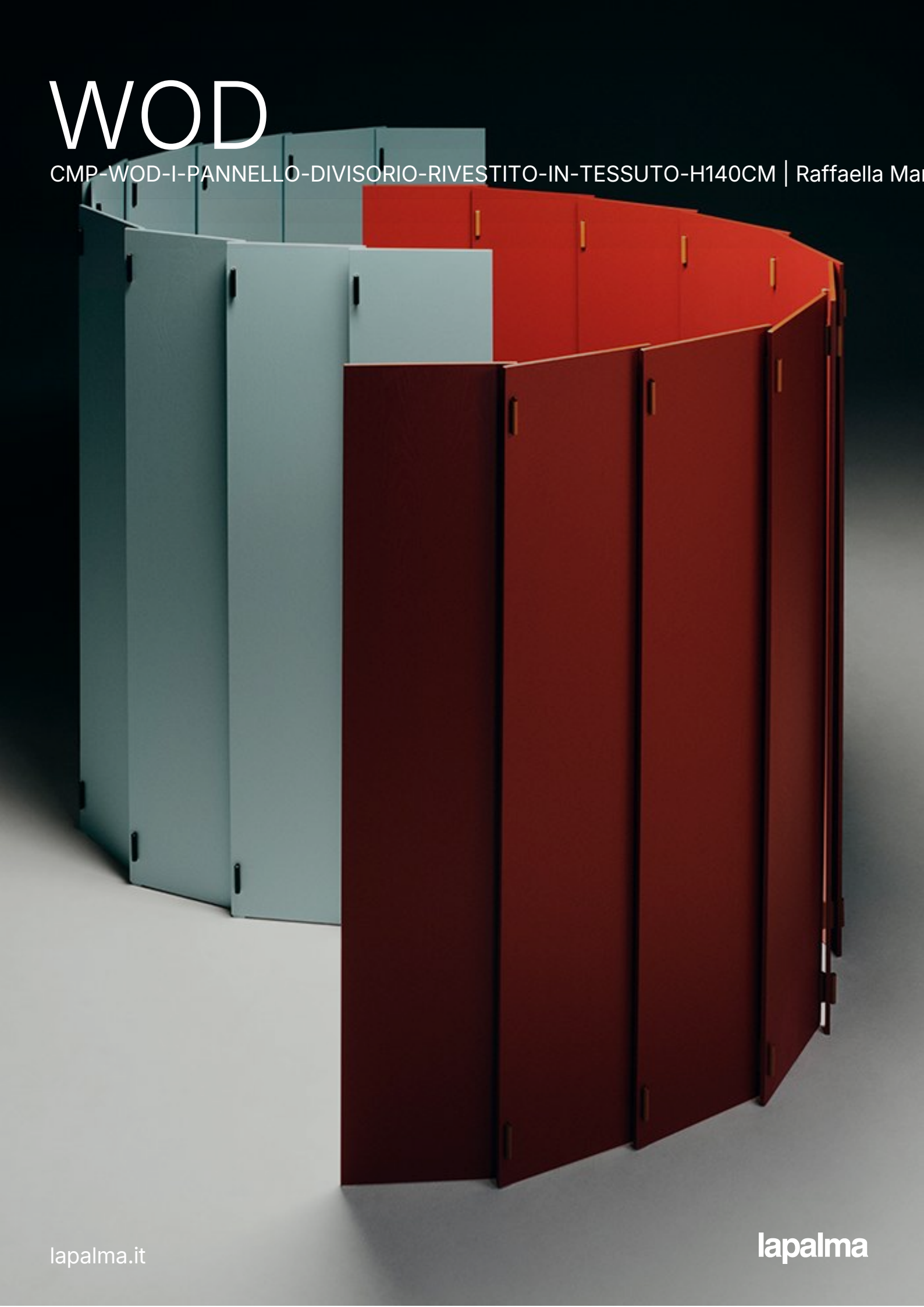

WOD

CMP-WOD-I-PANNELLO-DIVISORIO-RIVESTITO-IN-TESSUTO-H140CM | Raffaella Ma



Pannello divisorio rivestito in tessuto

Liberarse de lo superfluo para conseguir un equilibrio que es la medida justa de la elegancia. Es el desafio que ha superado WOD, el nuevo sistema modular de divisores de Lapalma, firmado por Raffaella Mangiarotti.

Con su diseño sobrio pero impactante y los materiales utilizados (madera o tela combinada con cuero natural o negro que garantizan robustez y flexibilidad, como un detalle refinado que embellece el efecto general), esta innovadora mampara representa un enfoque muy distintivo hacia la estética y el diseño. Con su diseño sobrio pero impactante y los materiales utilizados (madera o tela combinada con cuero natural o negro que garantizan robustez y flexibilidad, como un detalle refinado que embellece el efecto general), esta innovadora mampara representa un enfoque muy distintivo hacia la estética y el diseño.

Estar realizado en un solo material, además, agiliza el reciclaje al final de su vida útil También el transporte se caracteriza por la sostenibilidad, previendo un embalaje con flat pack que reduce las emisiones y los gastos de viaje.

Pannello divisorio rivestito in tessuto

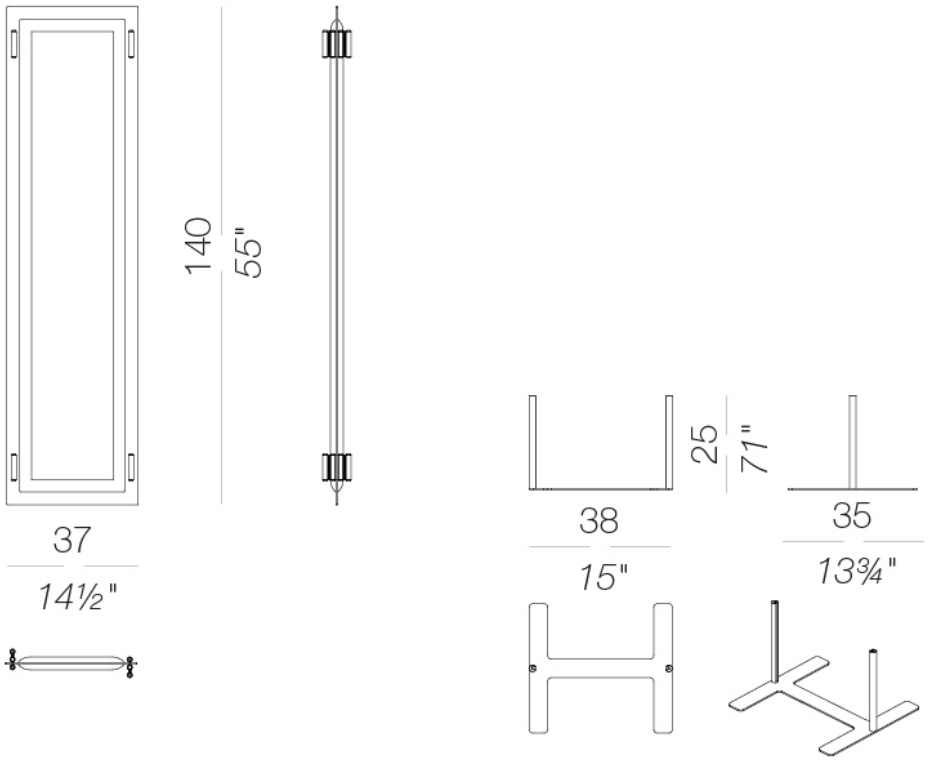

RIVESTIMENTO



Atrium (E)
16 colori



Blazer (D)
77 colori



Canvas (B)
45 colori



Capture (C)
59 colori



Chili (A)
47 colori



Crisp (C)
40 colori



Divina MD (F)
27 colori



Divina Melange 3 (F)
38 colori

Fiocco (B)
34 colori



Fiord 2 (C)
39 colori



Grain (B)
50 colori

Hallingdal 65 (C)
58 colori

Iris (D)
34 colori

Jet (A)
66 colori



Main Line Flax (C)
57 colori



Maya (A)
43 colori



Medley (A)
37 colori



Naveli (E)
24 colori



Nobel (D)
30 colori



Panama (A)
48 colori



Re-wool (E)
26 colori



Remix 3 (C)
74 colori



Sorrento (B)
22 colori

Steelcut 3 (D)
56 colori



Steelcut trio 3 (F)
54 colori



Tonica 2 (F)
39 colori

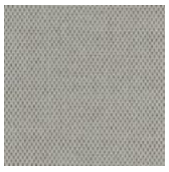

Umber (C)
36 colori



Valencia (B)
72 colori

CERNIERA

CUOIO
CERNIERE
1 colore

STAFFE DI UNIONE

Metallo
1 colore

Istruzioni di uso e manutenzione

Clean all parts in wood, leather, fabric and metal with a damp cloth or a diluted neutral cleaner. Do not use cleaners with alcohol, bleach, solvent or abrasive products. Any liquid spilt on the product must be wiped up immediately.

When lifting or moving the product, hold it on the structure and not under the seat. The product should not be subjected to unbalanced weights, as it is designed for a proper rest on the foothold (on four legs or on the base).

Avoid any improper use of the product: do not step on the product, on the footrest or on the armrests. Do not expose the product to weather conditions or atmospheric agents, nor to heat sources over 40°C. Also products for outdoor use could be afflicted by atmospheric agents.

An appropriate and frequent maintenance and cleaning of the product enhances its durability. The product could change colour and shade, if exposed to direct sunlight. Once the product has been dismantled, the product itself or its components must be given to the public garbage disposal system, according to the legislation in force.

lapalma