ADD SOFT

CMP-ADD-SOFT-I-VIS-A-VIS | Francesco Rota | 2018



lapalma.it

lapalma

ADD SOFT

CMP-ADD-SOFT-I-VIS-A-VIS | Francesco Rota | 2018



Vis à vis

Composición vis à vis pensada para favorecer el intercambio y la conversación, con estructura de aluminio extruido y correas elásticas cruzadas. Posibilidad de incorporar superficies de apoyo con tomas eléctricas integradas. Partes metálicas pintadas con polvo.



Vis à vis

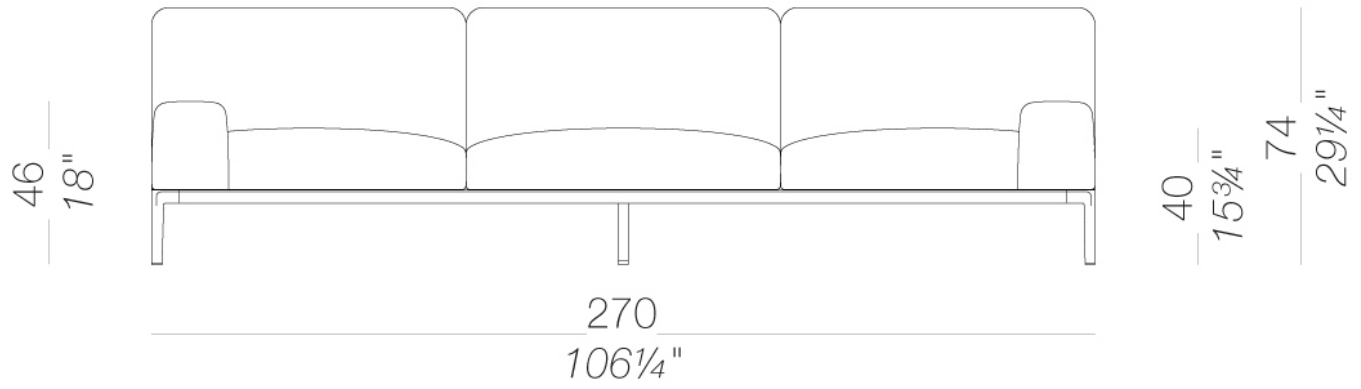

STRUTTURA



Alloro
Metallo

Bianco
Metallo



Borgogna
Metallo

Calce
Metallo



Cannella
Metallo



Celeste
Metallo



Corallo
Metallo



Gru
Metallo

Limone
Metallo



Mattone
Metallo



Nero
Metallo



Oltremare
Metallo

Perla
Metallo



Pistacchio
Metallo



Sabbia
Metallo



Tortora
Metallo

RIVESTIMENTO



Atrium (E)
16 colori

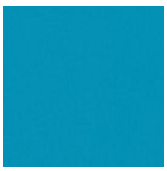

Blazer (D)
77 colori



Canvas (B)
45 colori



Capture (C)
59 colori



Chili (A)
47 colori



Crisp (C)
40 colori



Divina MD (F)
27 colori



Divina Melange 3 (F)
38 colori

Fiocco (B)
34 colori



Fiord 2 (C)
39 colori



Grain (B)
50 colori

Hallingdal 65 (C)
58 colori

Iris (D)
34 colori

Jet (A)
66 colori



Main Line Flax (C)
57 colori



Maya (A)
43 colori

RIVESTIMENTO



Medley (A)
37 colori



Naveli (E)
24 colori



Nobel (D)
30 colori



Panama (A)
48 colori



Re-wool (E)
26 colori



Remix 3 (C)
74 colori



Sorrento (B)
22 colori

Steelcut 3 (D)
56 colori



Steelcut trio 3 (F)
54 colori



Tonica 2 (F)
39 colori



Umber (C)
36 colori



Valencia (B)
72 colori

Seta
17 colori

PIANO

Abet
Laminato



Beige luxor
Laminato

Bianco
Laminato



Blu fes
Laminato

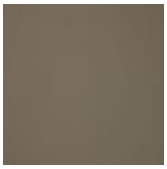

Castoro ottawa
Laminato



Grigio efeso
Laminato



Grigio Londra
Laminato



Nero
Laminato



Rosso Jaipur
Laminato



Verde comodoro
Laminato

Fenix 1,2
Laminato



Laccato
Legno



Alloro
Legno

Bianco
Legno



Borgogna
Legno



Cannella
Legno

PIANO



Celeste
Legno



Corallo
Legno

Limone
Legno



Mattone
Legno



Nero
Legno



Oltremare
Legno



Perla
Legno



Pistacchio
Legno



Sabbia
Legno



Tortora
Legno

Istruzioni di uso e manutenzione

Clean all parts in wood, leather, fabric and metal with a damp cloth or a diluted neutral cleaner. Do not use cleaners with alcohol, bleach, solvent or abrasive products. Any liquid spilt on the product must be wiped up immediately.

When lifting or moving the product, hold it on the structure and not under the seat. The product should not be subjected to unbalanced weights, as it is designed for a proper rest on the foothold (on four legs or on the base).

Avoid any improper use of the product: do not step on the product, on the footrest or on the armrests. Do not expose the product to weather conditions or atmospheric agents, nor to heat sources over 40°C. Also products for outdoor use could be afflicted by atmospheric agents.

An appropriate and frequent maintenance and cleaning of the product enhances its durability. The product could change colour and shade, if exposed to direct sunlight. Once the product has been dismantled, the product itself or its components must be given to the public garbage disposal system, according to the legislation in force.

lapalma