LYT

T86 | Klaus Nolting | 2024



lapalma.it

lapalma

LYT

T86 | Klaus Nolting | 2024



Tavolino luminoso

Mesita luminosa con alimentación por cable y luz LED bajo el estante. Encendido y apagado mediante sistema táctil regulable. La superficie integra una estación de carga inalámbrica para dispositivos compatibles con carga por inducción. Base y columna de metal pintado al polvo en varios colores. Tablero de MDF revestido en varios acabados, con borde y fondo lacados. Fieltro bajo la base. Alimentación mediante cable USB y adaptador de 5 V, incluidos.



Tavolino luminoso

Especificar el tipo de adaptador requerido:

- EU: enchufe europeo (tipo C)

- UK: enchufe británico

- US: enchufe estadounidense

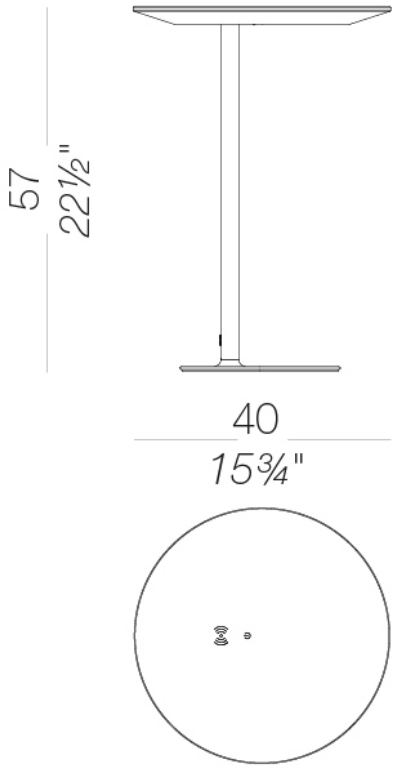

STRUTTURA



Alloro
Metallo

Bianco
Metallo



Borgogna
Metallo

Calce
Metallo



Cannella
Metallo



Celeste
Metallo



Corallo
Metallo



Gru
Metallo

Limone
Metallo



Mattone
Metallo



Nero
Metallo



Oltremare
Metallo

Perla
Metallo



Pistacchio
Metallo



Sabbia
Metallo



Tortora
Metallo

PIANO



Noce Canaletto
Legno



Rovere sbiancato
Legno



Alloro
Legno

Bianco
Legno



Borgogna
Legno

Calce
Legno



Cannella
Legno



Celeste
Legno



Corallo
Legno



Gru
Legno

Limone
Legno



Mattone
Legno



Nero
Legno



Oltremare
Legno

Perla
Legno



Pistacchio
Legno



Sabbia
Legno



Tortora
Legno

Istruzioni di uso e manutenzione

Clean all parts in wood, leather, fabric and metal with a damp cloth or a diluted neutral cleaner. Do not use cleaners with alcohol, bleach, solvent or abrasive products. Any liquid spilt on the product must be wiped up immediately.

When lifting or moving the product, hold it on the structure and not under the seat. The product should not be subjected to unbalanced weights, as it is designed for a proper rest on the foothold (on four legs or on the base).

Avoid any improper use of the product: do not step on the product, on the footrest or on the armrests. Do not expose the product to weather conditions or atmospheric agents, nor to heat sources over 40°C. Also products for outdoor use could be afflicted by atmospheric agents.

An appropriate and frequent maintenance and cleaning of the product enhances its durability. The product could change colour and shade, if exposed to direct sunlight. Once the product has been dismantled, the product itself or its components must be given to the public garbage disposal system, according to the legislation in force.

lapalma