FORK

T139 | Tomoya Tabuchi | 2016



lapalma.it

lapalma

FORK

T139 | Tomoya Tabuchi | 2016

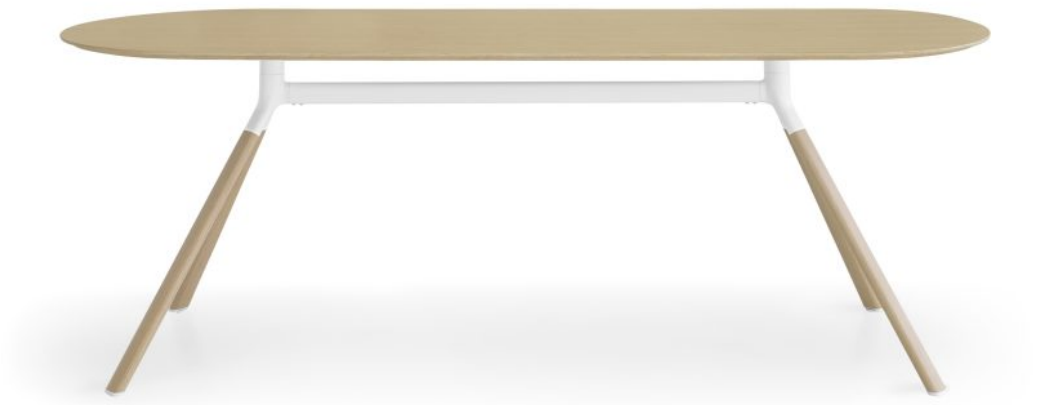

Tavolo h 74 cm piano oblungo

Mesa con encimera oblonga con perfil perfilado, de madera contrachapada de abedul para las versiones en roble, y en MDF para las versiones lacadas y laminadas Fenix®. Borde lacado del mismo color de la encimera. Base de mesa compuesta por dos juntas de 3 vías y dos placas para la fijación de las encimeras en aluminio reciclado fundido a presión lacado a polvo. Una barra de conexión en aluminio extruido para conectar las dos bases. Patas de aluminio extruido lacado a polvo o revestidas en roble y lacadas en varios acabados. Tacos regulables en nylon con sistema de precinto intercalados.



Tavolo h 74 cm piano oblungo

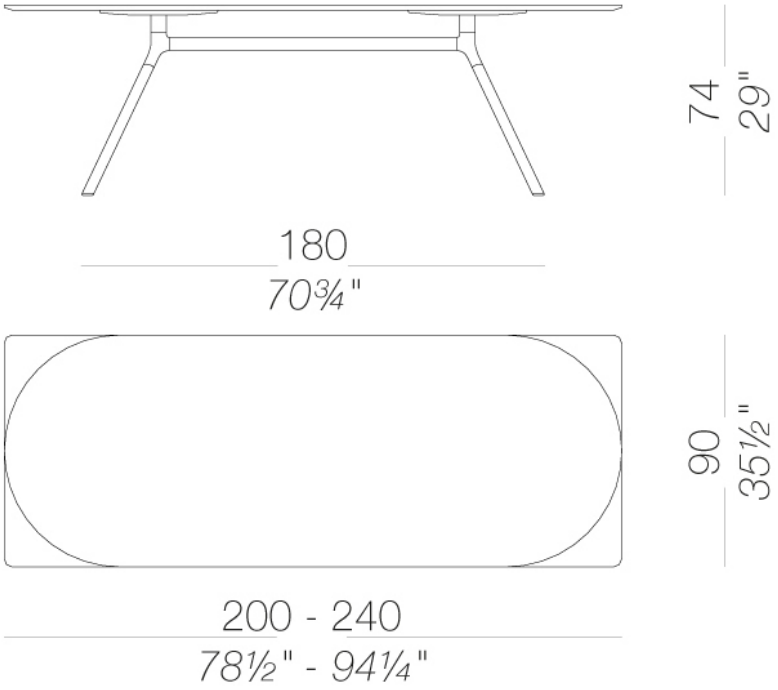

Istruzioni di uso e manutenzione

Clean all parts in wood, leather, fabric and metal with a damp cloth or a diluted neutral cleaner. Do not use cleaners with alcohol, bleach, solvent or abrasive products. Any liquid spilt on the product must be wiped up immediately.

When lifting or moving the product, hold it on the structure and not under the seat. The product should not be subjected to unbalanced weights, as it is designed for a proper rest on the foothold (on four legs or on the base).

Avoid any improper use of the product: do not step on the product, on the footrest or on the armrests. Do not expose the product to weather conditions or atmospheric agents, nor to heat sources over 40°C. Also products for outdoor use could be afflicted by atmospheric agents.

An appropriate and frequent maintenance and cleaning of the product enhances its durability. The product could change colour and shade, if exposed to direct sunlight. Once the product has been dismantled, the product itself or its components must be given to the public garbage disposal system, according to the legislation in force.

lapalma