# SEELA

S316_A | Antti Kotilainen | 2018



lapalma.it

lapalma

# SEELA

S316_A | Antti Kotilainen | 2018



Base 4 gambe con braccioli

Silla con carcasa de polipropileno con inserto integrado en el asiento, desmontable mediante 4 tornillos. Disponible en diferentes acabados, con posibilidad de combinar plástico, madera y tejidos. Base apilable 4 piernas con estructura de acero cromado satinado o lacado a polvo. Pies en nylon con fieltro integrado.



**Base 4 gambe con braccioli**

* la version en PP a prueba de fuego está disponible en blanco y negro (otros colores min. 100 uds.)

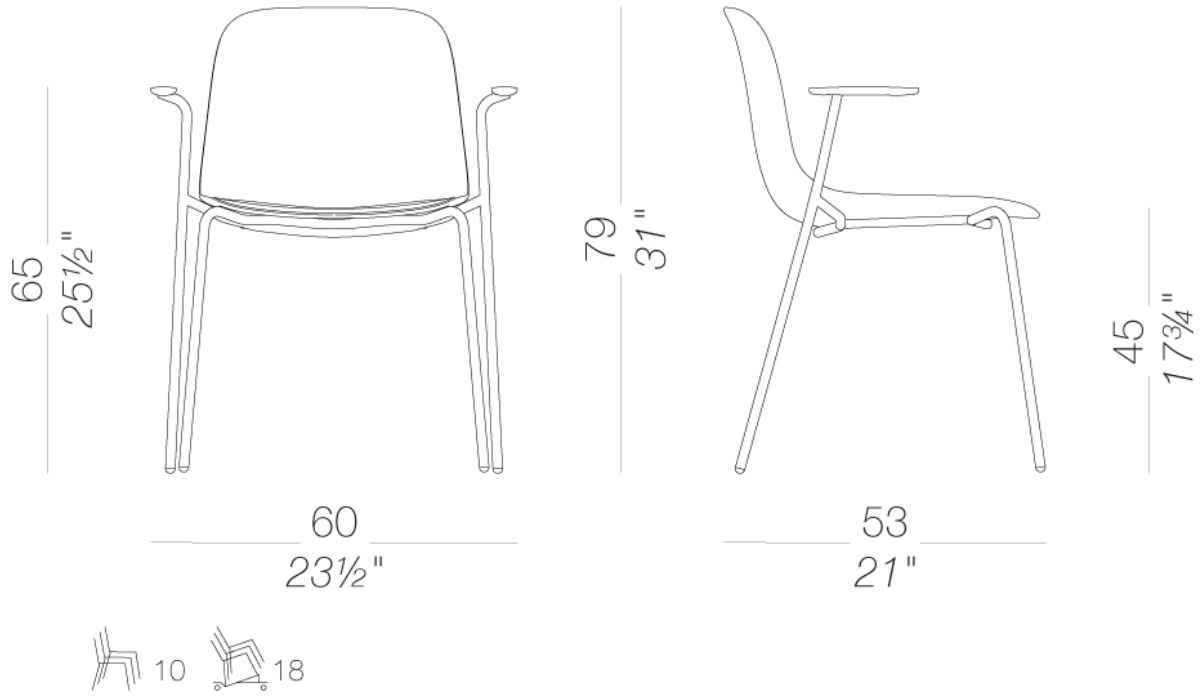

## STRUTTURA



**Alluminio**
Metallo



**Alloro**
Metallo



**Bianco**
Metallo



**Borgogna**
Metallo



**Calce**
Metallo



**Cannella**
Metallo



**Celeste**
Metallo



**Corallo**
Metallo



**Gru**
Metallo



**Limone**
Metallo



**Mattone**
Metallo



**Nero**
Metallo



**Oltremare**
Metallo



**Perla**
Metallo



**Pistacchio**
Metallo



**Sabbia**
Metallo



**Tortora**
Metallo

## SCOCCA



**Alloro**
Plastica



**Bianco**
Plastica



**Borgogna**
Plastica



**Calce**
Plastica



**Cannella**
Plastica



**Celeste**
Plastica



**Corallo**
Plastica



**Gru**
Plastica

## SCOCCA



**Limone**
Plastica



**Mattone**
Plastica



**Nero**
Plastica



**Oltremare**
Plastica



**Perla**
Plastica



**Pistacchio**
Plastica



**Sabbia**
Plastica



**Tortora**
Plastica



**PP riciclato**
Plastica

## PAD



**Atrium** (E)
16 colori



**Blazer** (D)
77 colori



**Canvas** (B)
45 colori



**Capture** (C)
59 colori



**Chili** (A)
47 colori



**Crisp** (C)
40 colori



**Divina MD** (F)
27 colori



**Divina Melange 3** (F)
38 colori



**Fiocco** (B)
34 colori



**Fiord 2** (C)
39 colori



**Grain** (B)
50 colori



**Hallingdal 65** (C)
58 colori



**Iris** (D)
34 colori



**Jet** (A)
66 colori



**Main Line Flax** (C)
57 colori



**Maya** (A)
43 colori



**Medley** (A)
37 colori



**Naveli** (E)
24 colori



**Nobel** (D)
30 colori



**Panama** (A)
48 colori



**Re-wool** (E)
26 colori



**Remix 3** (C)
74 colori



**Sorrento** (B)
22 colori



**Steelcut 3** (D)
56 colori

## PAD



**Steelcut trio 3** (F)
54 colori



**Tonica 2** (F)
39 colori



**Umber** (C)
36 colori



**Valencia** (B)
72 colori



**Frassino**
Legno



**Laccato poro aperto**
Legno



**Alloro**
Plastica



**Bianco**
Plastica



**Borgogna**
Plastica



**Calce**
Plastica



**Cannella**
Plastica

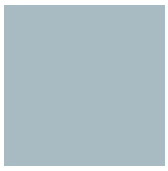

**Celeste**
Plastica



**Corallo**
Plastica



**Gru**
Plastica



**Limone**
Plastica



**Mattone**
Plastica



**Nero**
Plastica



**Oltremare**
Plastica



**Perla**
Plastica



**Pistacchio**
Plastica



**Sabbia**
Plastica



**Tortora**
Plastica



**PP riciclato**
Plastica

**Istruzioni di uso e manutenzione**

Clean all parts in wood, leather, fabric and metal with a damp cloth or a diluted neutral cleaner. Do not use cleaners with alcohol, bleach, solvent or abrasive products. Any liquid spilt on the product must be wiped up immediately.

When lifting or moving the product, hold it on the structure and not under the seat. The product should not be subjected to unbalanced weights, as it is designed for a proper rest on the foothold (on four legs or on the base).

Avoid any improper use of the product: do not step on the product, on the footrest or on the armrests. Do not expose the product to weather conditions or atmospheric agents, nor to heat sources over 40°C. Also products for outdoor use could be afflicted by atmospheric agents.

An appropriate and frequent maintenance and cleaning of the product enhances its durability. The product could change colour and shade, if exposed to direct sunlight. Once the product has been dismantled, the product itself or its components must be given to the public garbage disposal system, according to the legislation in force.

lapalma