THIN

S15 | Karri Monni | 2004



lapalma.it

lapalma

THIN

S15 | Karri Monni | 2004



Base 4 gambe impilabile con braccioli

Silla con apoyabrazos apilable, base 4 piernas en acero inoxidable arenado. Carcasa de madera contrachapada curvada con espesor diferenciado, en varios acabados o revestida completamente en cuero con costura visible: en este caso es aconsejable proteger el asiento si está apilado. También disponible con la carcasa revestida en piel. Pies en nylon con fieltro integrado. También disponible el taburete giratorio con altura regulable.



Base 4 gambe impilabile con braccioli

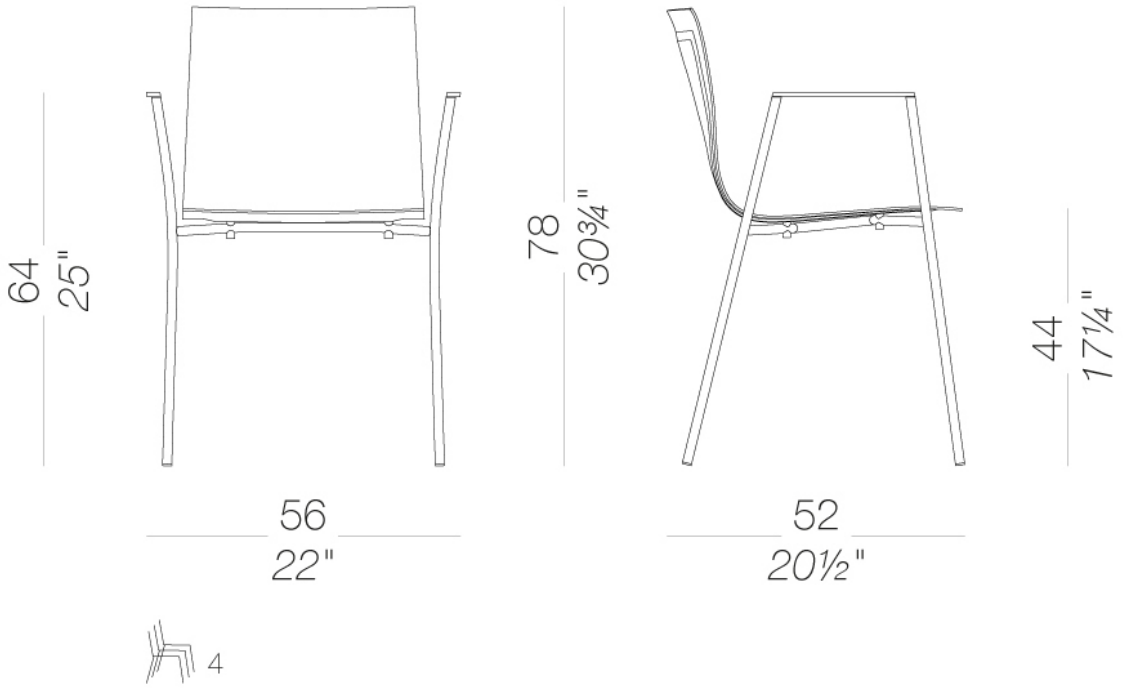

STRUTTURA



Acciaio inox
Metallo

SCOCCA



Rovere noce scuro
Legno



Rovere sbiancato
Legno

Laccato
Legno



Laccato poro aperto
Legno

RIVESTIMENTO



Cuoio
15 colori



Cuoio cerniere
2 colori

Seta
17 colori

Istruzioni di uso e manutenzione

Clean all parts in wood, leather, fabric and metal with a damp cloth or a diluted neutral cleaner. Do not use cleaners with alcohol, bleach, solvent or abrasive products. Any liquid spilt on the product must be wiped up immediately.

When lifting or moving the product, hold it on the structure and not under the seat. The product should not be subjected to unbalanced weights, as it is designed for a proper rest on the foothold (on four legs or on the base).

Avoid any improper use of the product: do not step on the product, on the footrest or on the armrests. Do not expose the product to weather conditions or atmospheric agents, nor to heat sources over 40°C. Also products for outdoor use could be afflicted by atmospheric agents.

An appropriate and frequent maintenance and cleaning of the product enhances its durability. The product could change colour and shade, if exposed to direct sunlight. Once the product has been dismantled, the product itself or its components must be given to the public garbage disposal system, according to the legislation in force.

lapalma