ADD SOFT

CMP-ADD-SOFT-O-DIVANO-TRE-POSTI | Francesco Rota | 2018



lapalma.it

lapalma

ADD SOFT

CMP-ADD-SOFT-O-DIVANO-TRE-POSTI | Francesco Rota | 2018



Divano 3 posti

Three-seater sofa with extruded aluminium frame and crossed elastic straps, featuring perimeter holes for fixing backrests and armrests in different positions. Corner or central legs in recycled die-cast aluminium. Cushions and backrest in polyurethane foam with variation in density and polyester fiber, all fire-retardant, with protective water-resistant and breathable fabric layer and finished with UV stable outdoor fabric. ADD is complemented by tops in HPL Fenix® 10 mm. All metal parts are powder coated. Water-resistant protective covers are available.



Divano 3 posti

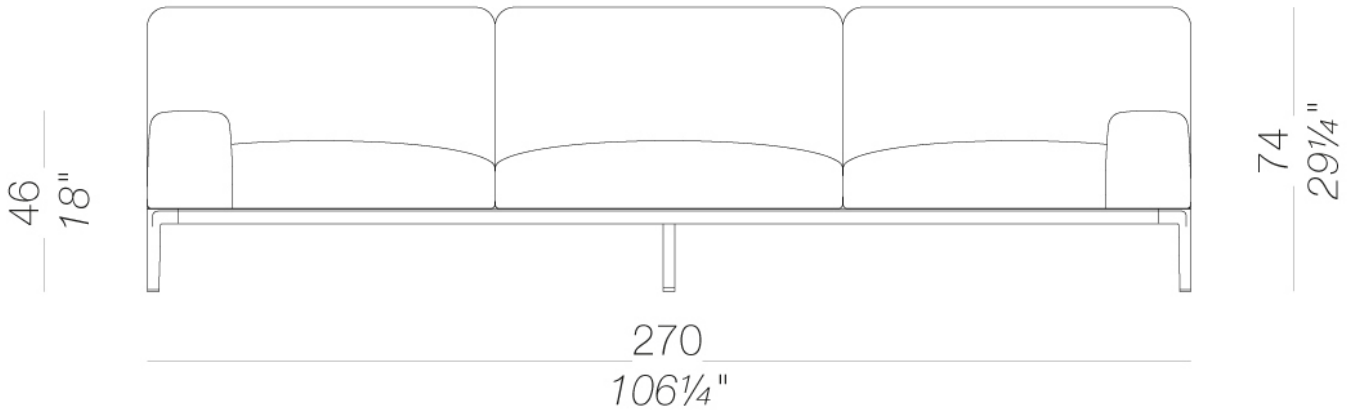

STRUTTURA



Alloro
Metallo

Bianco
Metallo



Borgogna
Metallo

Calce
Metallo



Cannella
Metallo

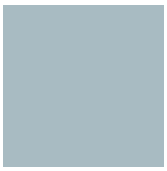

Celeste
Metallo



Corallo
Metallo



Gru
Metallo

Limone
Metallo



Mattone
Metallo



Nero
Metallo



Oltremare
Metallo

Perla
Metallo



Pistacchio
Metallo



Sabbia
Metallo



Tortora
Metallo

RIVESTIMENTO



Atrium (E)
16 colori

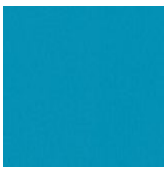

Blazer (D)
77 colori



Canvas (B)
45 colori



Capture (C)
59 colori



Chili (A)
47 colori



Crisp (C)
40 colori



Divina MD (F)
27 colori



Divina Melange 3 (F)
38 colori

Fiocco (B)
34 colori



Fiord 2 (C)
39 colori



Grain (B)
50 colori

Hallingdal 65 (C)
58 colori

Iris (D)
34 colori

Jet (A)
66 colori



Main Line Flax (C)
57 colori



Maya (A)
43 colori

RIVESTIMENTO



Medley (A)
37 colori



Naveli (E)
24 colori



Nobel (D)
30 colori



Panama (A)
48 colori



Re-wool (E)
26 colori



Remix 3 (C)
74 colori



Sorrento (B)
22 colori

Steelcut 3 (D)
56 colori



Steelcut trio 3 (F)
54 colori



Tonica 2 (F)
39 colori



Umber (C)
36 colori



Valencia (B)
72 colori

PIANO



Beige luxor
HPL

Bianco
HPL



Blu fes
HPL

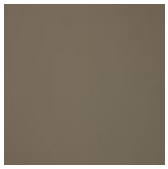

Castoro ottawa
HPL



Grigio efeso
HPL



Grigio Londra
HPL



Nero
HPL



Rosso Jaipur
HPL



Verde comodoro
HPL

Istruzioni di uso e manutenzione

Clean all parts in wood, leather, fabric and metal with a damp cloth or a diluted neutral cleaner. Do not use cleaners with alcohol, bleach, solvent or abrasive products. Any liquid spilt on the product must be wiped up immediately.

When lifting or moving the product, hold it on the structure and not under the seat. The product should not be subjected to unbalanced weights, as it is designed for a proper rest on the foothold (on four legs or on the base).

Avoid any improper use of the product: do not step on the product, on the footrest or on the armrests. Do not expose the product to weather conditions or atmospheric agents, nor to heat sources over 40°C. Also products for outdoor use could be afflicted by atmospheric agents.

An appropriate and frequent maintenance and cleaning of the product enhances its durability. The product could change colour and shade, if exposed to direct sunlight. Once the product has been dismantled, the product itself or its components must be given to the public garbage disposal system, according to the legislation in force.

lapalma