FORK

T139 | Tomoya Tabuchi | 2016



lapalma.it

lapalma

FORK

T139 | Tomoya Tabuchi | 2016

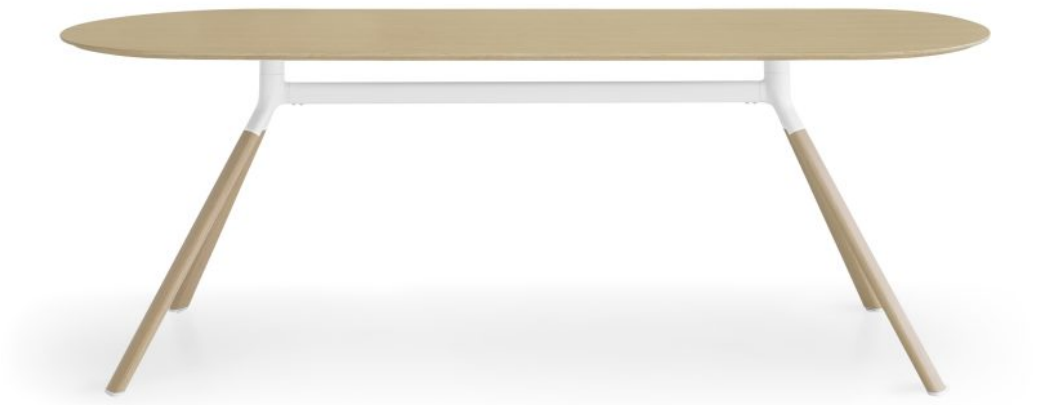

Tavolo h 74 cm piano oblungo

Table with rounded ends top with beveled edge in plywood of birch veneered in oak or in MDF if lacquered or in hpl Fenix®. Edges are lacquered in the same colour of the top. Base composed of aluminium drawn tube with elliptical section and two 3-way connections in die-cast recycled powder coated aluminium with two fixing plates for the top. Legs in aluminium extrusion veneered in wood or powder coated in several finishes. Adjustable knurled glides in nylon.



Tavolo h 74 cm piano oblungo

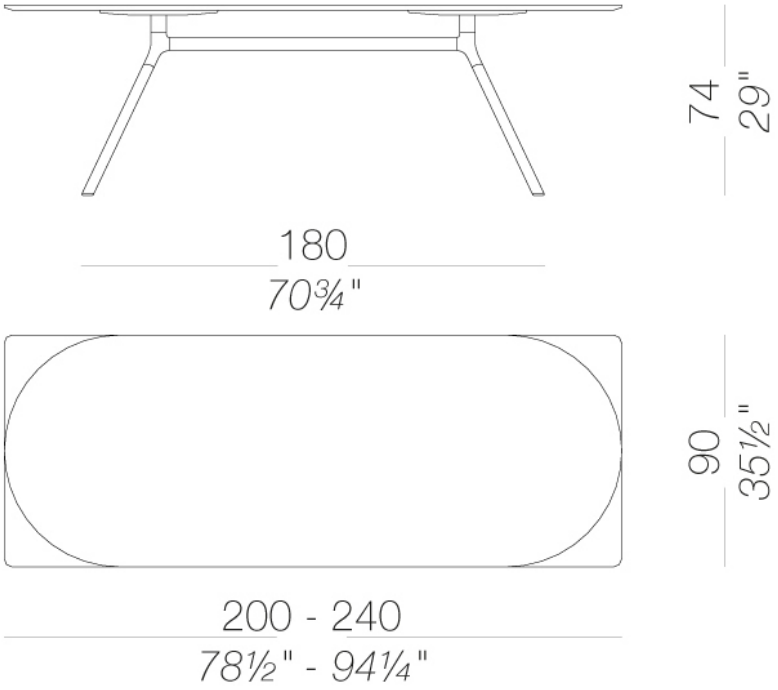

Istruzioni di uso e manutenzione

Clean all parts in wood, leather, fabric and metal with a damp cloth or a diluted neutral cleaner. Do not use cleaners with alcohol, bleach, solvent or abrasive products. Any liquid spilt on the product must be wiped up immediately.

When lifting or moving the product, hold it on the structure and not under the seat. The product should not be subjected to unbalanced weights, as it is designed for a proper rest on the foothold (on four legs or on the base).

Avoid any improper use of the product: do not step on the product, on the footrest or on the armrests. Do not expose the product to weather conditions or atmospheric agents, nor to heat sources over 40°C. Also products for outdoor use could be afflicted by atmospheric agents.

An appropriate and frequent maintenance and cleaning of the product enhances its durability. The product could change colour and shade, if exposed to direct sunlight. Once the product has been dismantled, the product itself or its components must be given to the public garbage disposal system, according to the legislation in force.

lapalma