CUBO

S62 | Enzo Berti | 1998

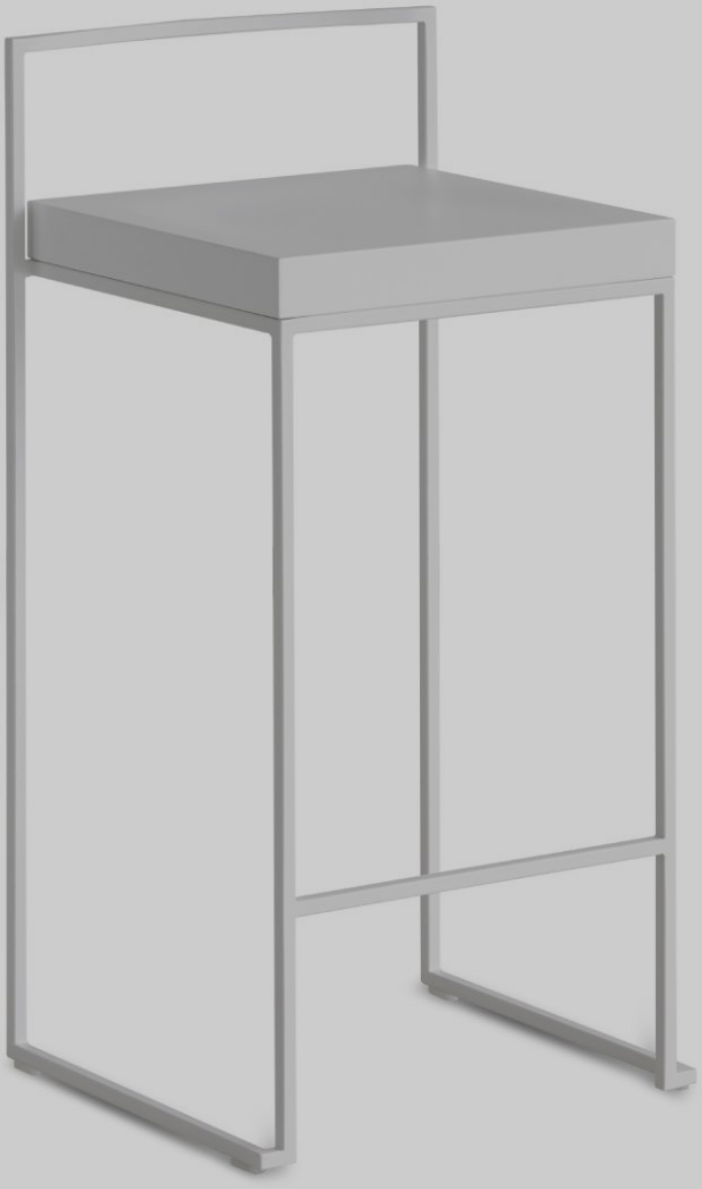

CUBO

S62 | Enzo Berti | 1998



Base a slitta impilabile

Stackable stool H 65 cm. Seat in plywood moulding technology in several finishes or covered with hard leather with top stitching. Frame in mat chromed or powder coated steel. Glides in polythene. Available also the chair.



Base a slitta impilabile

If stacked, we suggest to protect the hard leather seat.

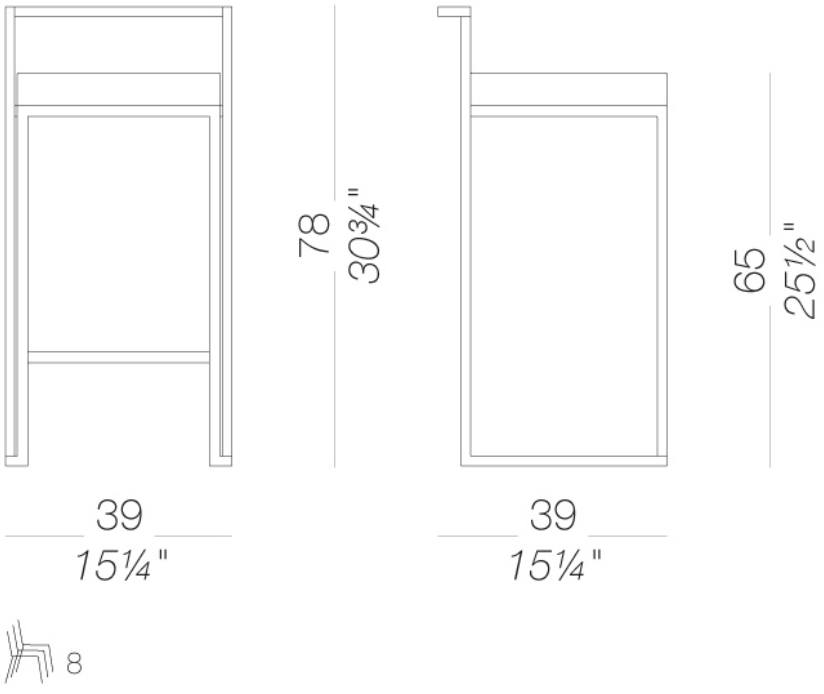

STRUTTURA



Alluminio
Metallo

Bianco
Metallo



Nero
Metallo

SEDILE



Faggio noce scuro
Legno



Faggio sbiancato
Legno

Bianco
Legno



Nero
Legno



Bianco
Cuoio



C1
Cuoio



C10
Cuoio



C2
Cuoio



C3
Cuoio

C4
Cuoio

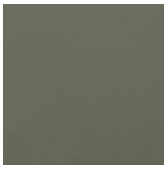

C7
Cuoio



C9
Cuoio

Fango chiaro
Cuoio

Fango scuro
Cuoio



Grigio
Cuoio



Marrone scuro
Cuoio

Naturale
Cuoio



Nero
Cuoio

Rosso
Cuoio



C0
Cuoio

Istruzioni di uso e manutenzione

Clean all parts in wood, leather, fabric and metal with a damp cloth or a diluted neutral cleaner. Do not use cleaners with alcohol, bleach, solvent or abrasive products. Any liquid spilt on the product must be wiped up immediately.

When lifting or moving the product, hold it on the structure and not under the seat. The product should not be subjected to unbalanced weights, as it is designed for a proper rest on the foothold (on four legs or on the base).

Avoid any improper use of the product: do not step on the product, on the footrest or on the armrests. Do not expose the product to weather conditions or atmospheric agents, nor to heat sources over 40°C. Also products for outdoor use could be afflicted by atmospheric agents.

An appropriate and frequent maintenance and cleaning of the product enhances its durability. The product could change colour and shade, if exposed to direct sunlight. Once the product has been dismantled, the product itself or its components must be given to the public garbage disposal system, according to the legislation in force.

lapalma