RYO

S173 | Enzo Berti | 2017



lapalma.it

lapalma

RYO

S173 | Enzo Berti | 2017



Sgabello regolabile

Height adjustable seating aid, with powder coated tilting metal base and column. Seat in solid ashwood or black stained open pore. The button to activate the gasspring is integrated under the seat.



Sgabello regolabile

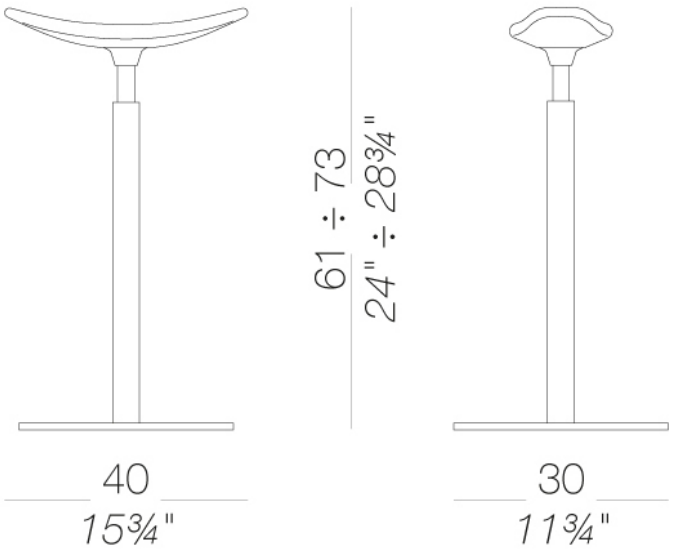

STRUTTURA

Bianco
Metallo



Nero
Metallo

SEDILE



Frassino
Legno



Laccato poro aperto
Legno

Istruzioni di uso e manutenzione

Clean all parts in wood, leather, fabric and metal with a damp cloth or a diluted neutral cleaner. Do not use cleaners with alcohol, bleach, solvent or abrasive products. Any liquid spilt on the product must be wiped up immediately.

When lifting or moving the product, hold it on the structure and not under the seat. The product should not be subjected to unbalanced weights, as it is designed for a proper rest on the foothold (on four legs or on the base).

Avoid any improper use of the product: do not step on the product, on the footrest or on the armrests. Do not expose the product to weather conditions or atmospheric agents, nor to heat sources over 40°C. Also products for outdoor use could be afflicted by atmospheric agents.

An appropriate and frequent maintenance and cleaning of the product enhances its durability. The product could change colour and shade, if exposed to direct sunlight. Once the product has been dismantled, the product itself or its components must be given to the public garbage disposal system, according to the legislation in force.

lapalma