AUKI

ET121 | Hee Welling | 2015



lapalma.it

lapalma

AUKI

ET121 | Hee Welling | 2015



Tavolo h 72 cm - L 43 cm

Table with round table top in HPL Fenix® 10 mm. Star base and top fixing plate in aluminium, column in stainless steel, all powder coated polyester. Glides in polythene.



Tavolo h 72 cm - L 43 cm

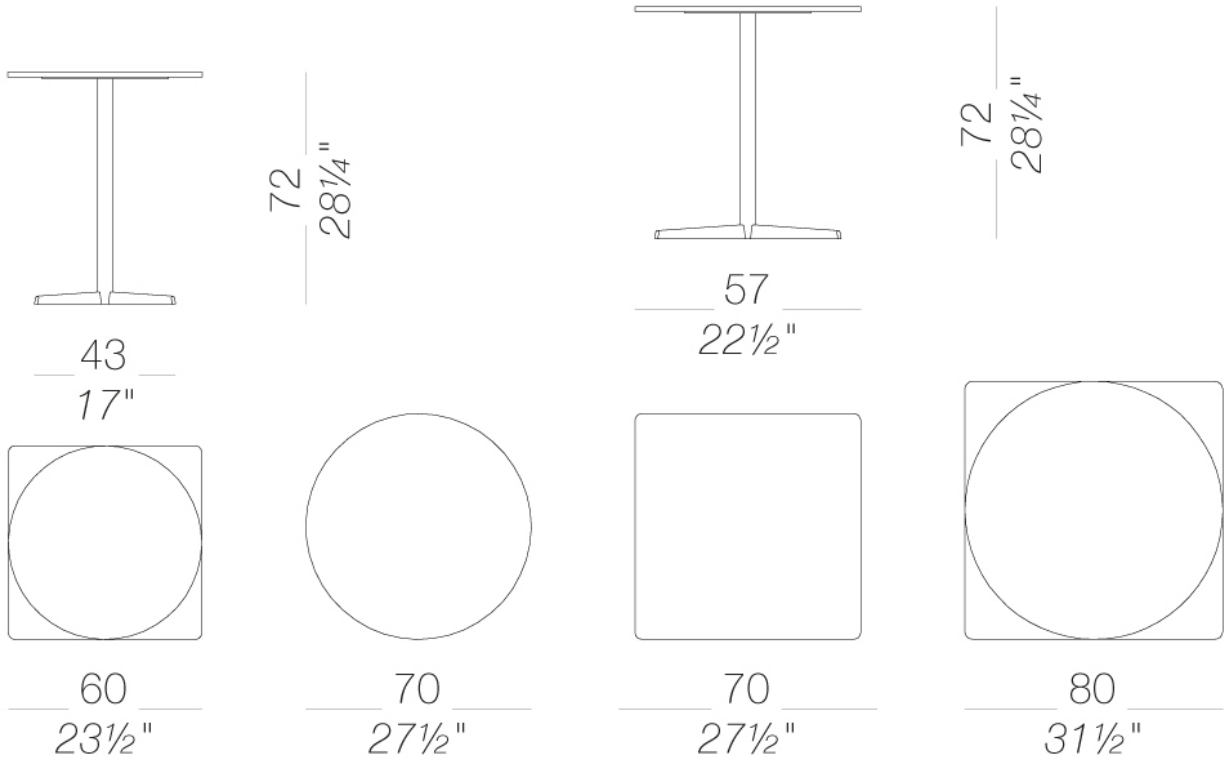

STRUTTURA



Alloro
Metallo



Antracite
Metallo

Bianco
Metallo



Borgogna
Metallo

Calce
Metallo



Cannella
Metallo



Celeste
Metallo



Corallo
Metallo



Gru
Metallo

Limone
Metallo



Mattone
Metallo



Oltremare
Metallo

Perla
Metallo



Pistacchio
Metallo



Sabbia
Metallo



Tortora
Metallo

PIANO



Beige luxor
HPL

Bianco
HPL



Blu fes
HPL

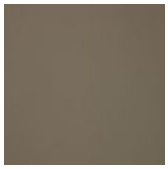

Castoro ottawa
HPL



Grigio efeso
HPL



Grigio Londra
HPL



Nero
HPL



Rosso Jaipur
HPL



Verde comodoro
HPL

Istruzioni di uso e manutenzione

Clean all parts in wood, leather, fabric and metal with a damp cloth or a diluted neutral cleaner. Do not use cleaners with alcohol, bleach, solvent or abrasive products. Any liquid spilt on the product must be wiped up immediately.

When lifting or moving the product, hold it on the structure and not under the seat. The product should not be subjected to unbalanced weights, as it is designed for a proper rest on the foothold (on four legs or on the base).

Avoid any improper use of the product: do not step on the product, on the footrest or on the armrests. Do not expose the product to weather conditions or atmospheric agents, nor to heat sources over 40°C. Also products for outdoor use could be afflicted by atmospheric agents.

An appropriate and frequent maintenance and cleaning of the product enhances its durability. The product could change colour and shade, if exposed to direct sunlight. Once the product has been dismantled, the product itself or its components must be given to the public garbage disposal system, according to the legislation in force.

lapalma