CROSS

ES451 | Mario Ferrarini | 2022



lapalma.it

lapalma

CROSS

ES451 | Mario Ferrarini | 2022



Sgabello h 65 cm

Stool with cantilevered tubular stainless steel frame powder coated finish. Seat in polyurethane with rigid insert. Anti-tipping metal glides at front in same powder finish. Feet in polythene.



Sgabello h 65 cm

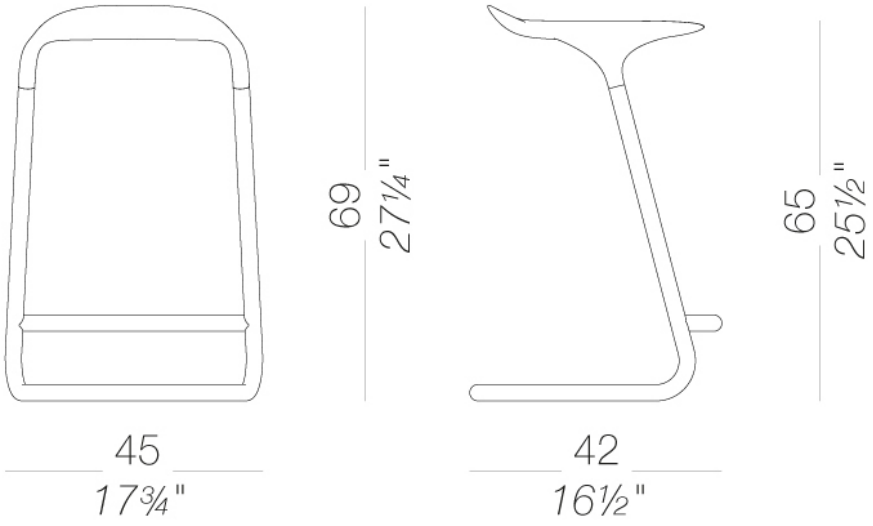

STRUTTURA



Verniciatura a polvere
Metallo

SEDILE



Poliuretano
Plastica

Istruzioni di uso e manutenzione

Clean all parts in wood, leather, fabric and metal with a damp cloth or a diluted neutral cleaner. Do not use cleaners with alcohol, bleach, solvent or abrasive products. Any liquid spilt on the product must be wiped up immediately.

When lifting or moving the product, hold it on the structure and not under the seat. The product should not be subjected to unbalanced weights, as it is designed for a proper rest on the foothold (on four legs or on the base).

Avoid any improper use of the product: do not step on the product, on the footrest or on the armrests. Do not expose the product to weather conditions or atmospheric agents, nor to heat sources over 40°C. Also products for outdoor use could be afflicted by atmospheric agents.

An appropriate and frequent maintenance and cleaning of the product enhances its durability. The product could change colour and shade, if exposed to direct sunlight. Once the product has been dismantled, the product itself or its components must be given to the public garbage disposal system, according to the legislation in force.

lapalma