HAWI

ES420 | Mario Ferrarini | 2024



lapalma.it

lapalma

HAWI

ES420 | Mario Ferrarini | 2024



Sedia base impilabile 4 gambe

Stackable chair with powder-coated stainless steel frame. Seat and backrest in polypropylene in different colors. Plastic feet.



Sedia base impilabile 4 gambe

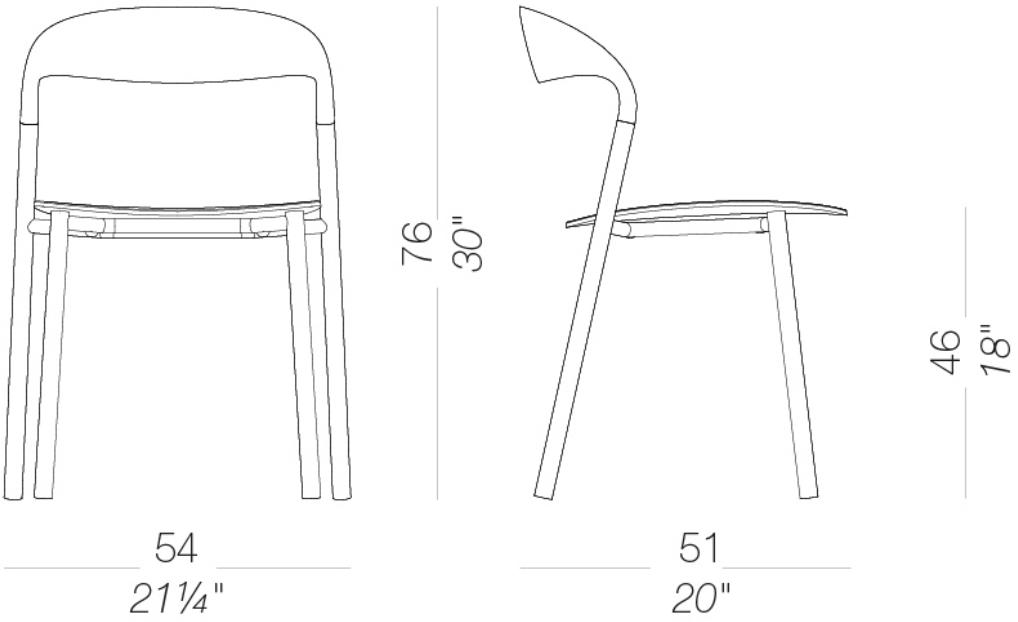

STRUTTURA



Alloro
Metallo

Bianco
Metallo

Borgogna
Metallo

Calce
Metallo

Cannella
Metallo

Celeste
Metallo

Corallo
Metallo

Gru
Metallo



Limone
Metallo

Mattone
Metallo

Nero
Metallo

Oltremare
Metallo

Perla
Metallo

Pistacchio
Metallo

Sabbia
Metallo

Tortora
Metallo

SEDILE/SCHIENALE



Alloro
Plastica

Bianco
Plastica

Borgogna
Plastica

Calce
Plastica

Cannella
Plastica

Celeste
Plastica

Corallo
Plastica

Gru
Plastica



Limone
Plastica

Mattone
Plastica

Nero
Plastica

Oltremare
Plastica

Perla
Plastica

Pistacchio
Plastica

Sabbia
Plastica

Tortora
Plastica

Istruzioni di uso e manutenzione

Clean all parts in wood, leather, fabric and metal with a damp cloth or a diluted neutral cleaner. Do not use cleaners with alcohol, bleach, solvent or abrasive products. Any liquid spilt on the product must be wiped up immediately.

When lifting or moving the product, hold it on the structure and not under the seat. The product should not be subjected to unbalanced weights, as it is designed for a proper rest on the foothold (on four legs or on the base).

Avoid any improper use of the product: do not step on the product, on the footrest or on the armrests. Do not expose the product to weather conditions or atmospheric agents, nor to heat sources over 40°C. Also products for outdoor use could be afflicted by atmospheric agents.

An appropriate and frequent maintenance and cleaning of the product enhances its durability. The product could change colour and shade, if exposed to direct sunlight. Once the product has been dismantled, the product itself or its components must be given to the public garbage disposal system, according to the legislation in force.

lapalma