SEELA

S314_A | Antti Kotilainen | 2018



lapalma.it

lapalma

SEELA

S314_A | Antti Kotilainen | 2018



Base a slitta con braccioli

Stuhl mit Sitzschale aus Polypropylen mit austauschbarer Sitzeinlage, das mittels 4 Schrauben abnehmbar ist. In verschiedenen Ausführungen erhältlich, mit der Möglichkeit, Kunststoff, Holz und Stoffe zu kombinieren. Kufengestell für stapelbaren Stuhl aus Stahldraht, matt verchromt oder pulverlackiert. Armlehnen aus Polypropylen. Gleiter aus Polypropylen mit Filz- oder Kunststoffeinsatz.



Base a slitta con braccioli

* Die feuerhemmende Sitzschale aus Polypropylen ist in den Farb en weiß und schwarz erhältlich (andere Farben ab 100 Stück)

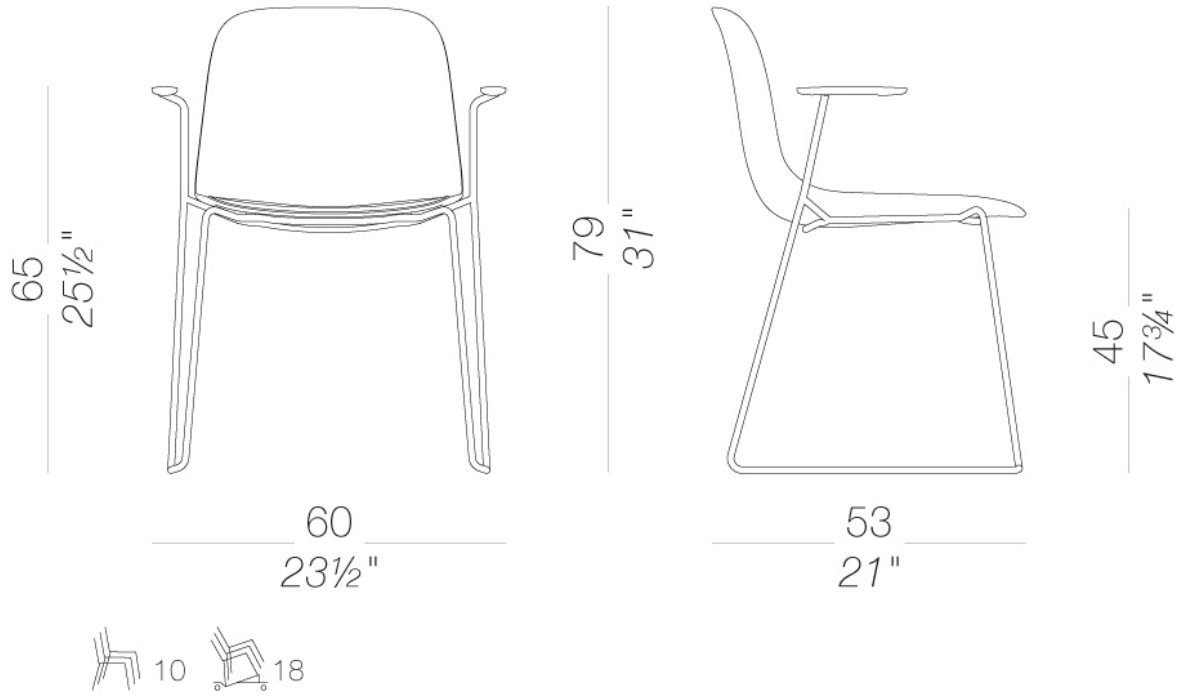

STRUTTURA



Alluminio
Metallo



Alloro
Metallo

Bianco
Metallo



Borgogna
Metallo

Calce
Metallo



Cannella
Metallo



Celeste
Metallo



Corallo
Metallo



Gru
Metallo

Limone
Metallo



Mattone
Metallo



Nero
Metallo



Oltremare
Metallo

Perla
Metallo



Pistacchio
Metallo



Sabbia
Metallo



Tortora
Metallo

SCOCCA



Alloro
Plastica

Bianco
Plastica



Borgogna
Plastica

Calce
Plastica



Cannella
Plastica



Celeste
Plastica



Corallo
Plastica



Gru
Plastica

SCOCCA

Limone
Plastica



Mattone
Plastica



Nero
Plastica



Oltremare
Plastica

Perla
Plastica



Pistacchio
Plastica



Sabbia
Plastica



Tortora
Plastica



PP riciclato
Plastica

PAD



Atrium (E)
16 colori



Blazer (D)
77 colori



Canvas (B)
45 colori



Capture (C)
59 colori



Chili (A)
47 colori



Crisp (C)
40 colori



Divina MD (F)
27 colori



Divina Melange 3 (F)
38 colori

Fiocco (B)
34 colori



Fiord 2 (C)
39 colori



Grain (B)
50 colori

Hallingdal 65 (C)
58 colori

Iris (D)
34 colori

Jet (A)
66 colori



Main Line Flax (C)
57 colori



Maya (A)
43 colori



Medley (A)
37 colori



Naveli (E)
24 colori



Nobel (D)
30 colori



Panama (A)
48 colori



Re-wool (E)
26 colori



Remix 3 (C)
74 colori



Sorrento (B)
22 colori

Steelcut 3 (D)
56 colori

PAD



Steelcut trio 3 (F)
54 colori



Tonica 2 (F)
39 colori



Umber (C)
36 colori



Valencia (B)
72 colori



Frassino
Legno



Laccato poro aperto
Legno



Alloro
Plastica

Bianco
Plastica



Borgogna
Plastica

Calce
Plastica



Cannella
Plastica

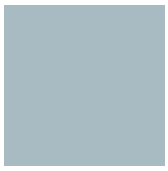

Celeste
Plastica



Corallo
Plastica



Gru
Plastica

Limone
Plastica



Mattone
Plastica



Nero
Plastica



Oltremare
Plastica

Perla
Plastica



Pistacchio
Plastica



Sabbia
Plastica



Tortora
Plastica



PP riciclato
Plastica

Istruzioni di uso e manutenzione

Clean all parts in wood, leather, fabric and metal with a damp cloth or a diluted neutral cleaner. Do not use cleaners with alcohol, bleach, solvent or abrasive products. Any liquid spilt on the product must be wiped up immediately.

When lifting or moving the product, hold it on the structure and not under the seat. The product should not be subjected to unbalanced weights, as it is designed for a proper rest on the foothold (on four legs or on the base).

Avoid any improper use of the product: do not step on the product, on the footrest or on the armrests. Do not expose the product to weather conditions or atmospheric agents, nor to heat sources over 40°C. Also products for outdoor use could be afflicted by atmospheric agents.

An appropriate and frequent maintenance and cleaning of the product enhances its durability. The product could change colour and shade, if exposed to direct sunlight. Once the product has been dismantled, the product itself or its components must be given to the public garbage disposal system, according to the legislation in force.

lapalma